A	TAMPA INFERIOR	BR32006	
B	CARCAÇA MONGERADA	BRHA690-4	AD
C	TAMPA SUPERIOR ASSEMBLADA	320-10666	
		BRHA706 (ALT 1)	AB
		320-10396 (ALT 2)	
D	ACUMULADOR COMPLETO	BRA12100-4	
E	SUBUNIDENTORIAGEM	28136	
F	SUBUNIDENTORIAGEM FRENTE	28832-1	
G	SUBUNIDENTORIAGEM TRASEIRO	28834-1	
H	PARAFUSO FLATES SUPERIOR	330-10142	AD
J	PORCA HEXAGONAL	11230	
K	TAMPA INFERIOR	BR71069	
L	JUNTA MONTAGEM TAMPA BASE	BR30649-1	

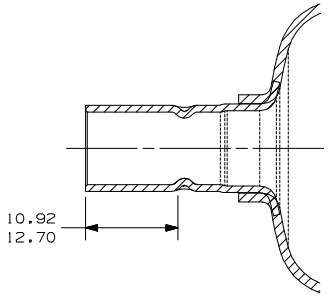

AC SECTION A-A
SCALE 2:1

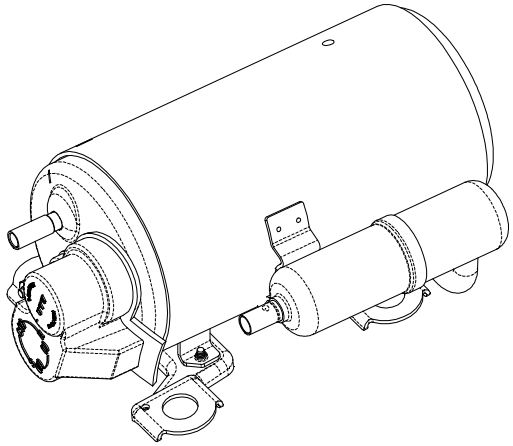

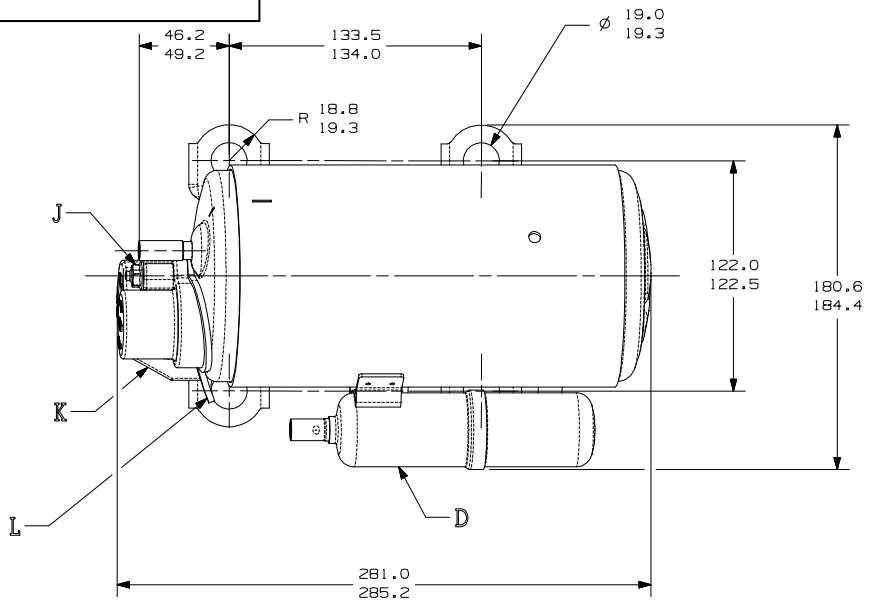

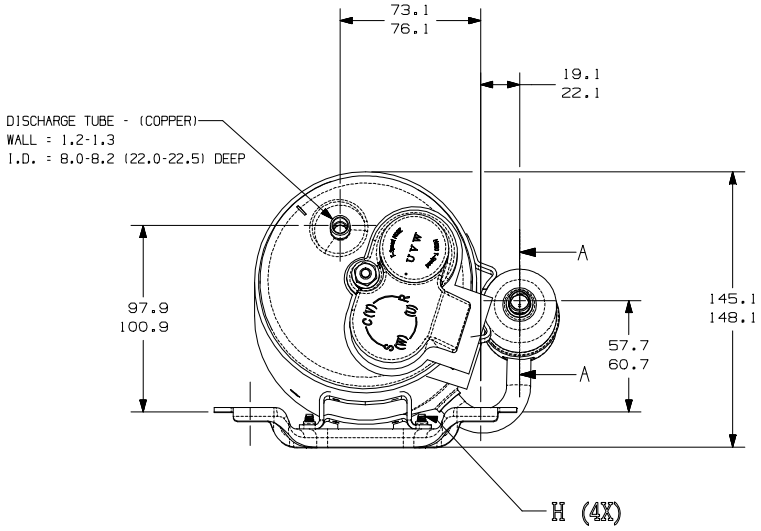

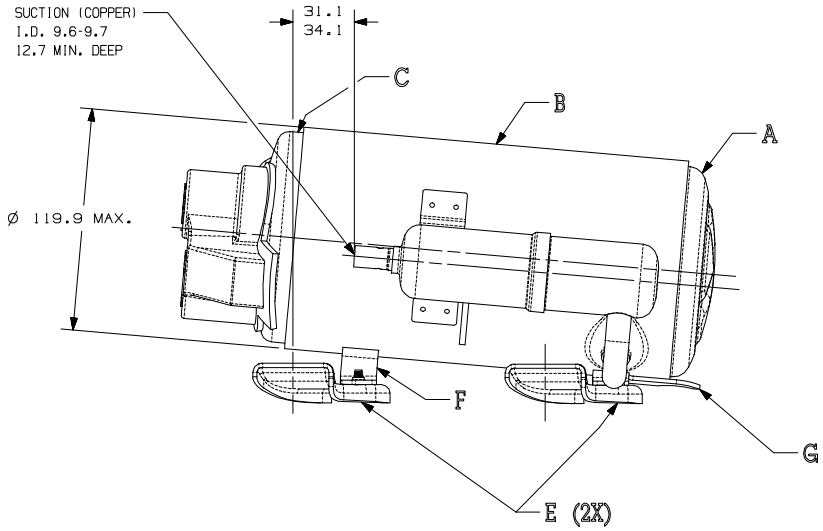

KIT 9,10 R410A

	EC91480 17-12-20 AMP NICOLAU	EC90875 06-09-19 CADEM MS.	EC81070 19-03-18 CADEM MS.	EC82558 01-02-18 PS. MS.	EC72285 13-07-16 AMP MS	DATE
	ERA 10780-5 PASSOU PARA 330-10142	TAMPA SUP. MONTADA ERA 320-10396	ACRESCENTADO CORTE A-A	ALTERADO COD. ERA: 320-10397 ERM: BRA12100-6	LIBERADO	CHANGE
	F7	F7	DB	F7	--	LC
	AE	AD	AC	AB	AA	LT

THIS DRAWING OR PRINT (1) IS THE PROPERTY OF TECUMSEH DO BRASIL LTDA. AND CONTAINS PROPRIETARY AND CONFIDENTIAL INFORMATION BELONGING TO TECUMSEH DO BRASIL. (11) IS MADE AVAILABLE ON THE RECEIPT OR USE EXPRESS AND SPECIFIC CONDITION THAT NEITHER IT NOR THE INFORMATION CONTAINED THEREON OR DISCLOSED OR MADE AVAILABLE TO OTHERS WITHOUT THE EXPRESS AND SPECIFIC WRITTEN CONSENT OF TECUMSEH DO BRASIL AND THAT SUCH INFORMATION ONLY AS EXPRESSLY AUTHORIZED BY SUCH WRITTEN CONSENT OF TECUMSEH DO BRASIL AND NOT OTHERWISE (111) SHALL NOT BE COPIED OR TO ANY EXTENT WITHOUT TECUMSEH DO BRASIL PRIOR EXPRESS AND SPECIFIC WRITTEN CONSENT AND (IV) SHALL BE RETURNED TO THE ADDRESSEE AT HIS REQUEST PROMPTLY AFTER SUCH REQUEST IS MADE.

DO NOT SCALE THIS DRAWING. ALL FERROUS MATERIALS MUST NOT BE MAGNETIZED AS RECEIVED OR AT COMPRESSOR ASSEMBLY

THIRD ANGLE PROJECTION

UNITS: mm

DRAWING SIZE: A2

Q. A.SYMBOLS AS PROCEDURE 2.01.031 TECUMSEH OF BRAZIL

✱ : CATEGORY I
▲ : CATEGORY II
■ : CATEGORY III
: CATEGORY IV

Tecumseh

NAME: SALES COMPRESSOR			PART NO. DCHG933	
DWN. A.MARCOS	CK. MARCIO	APR. WARTER CORREA	SCALE 1:2	PAGE 1/1
DATE 31-05-16	REF.		FAMILY HG	