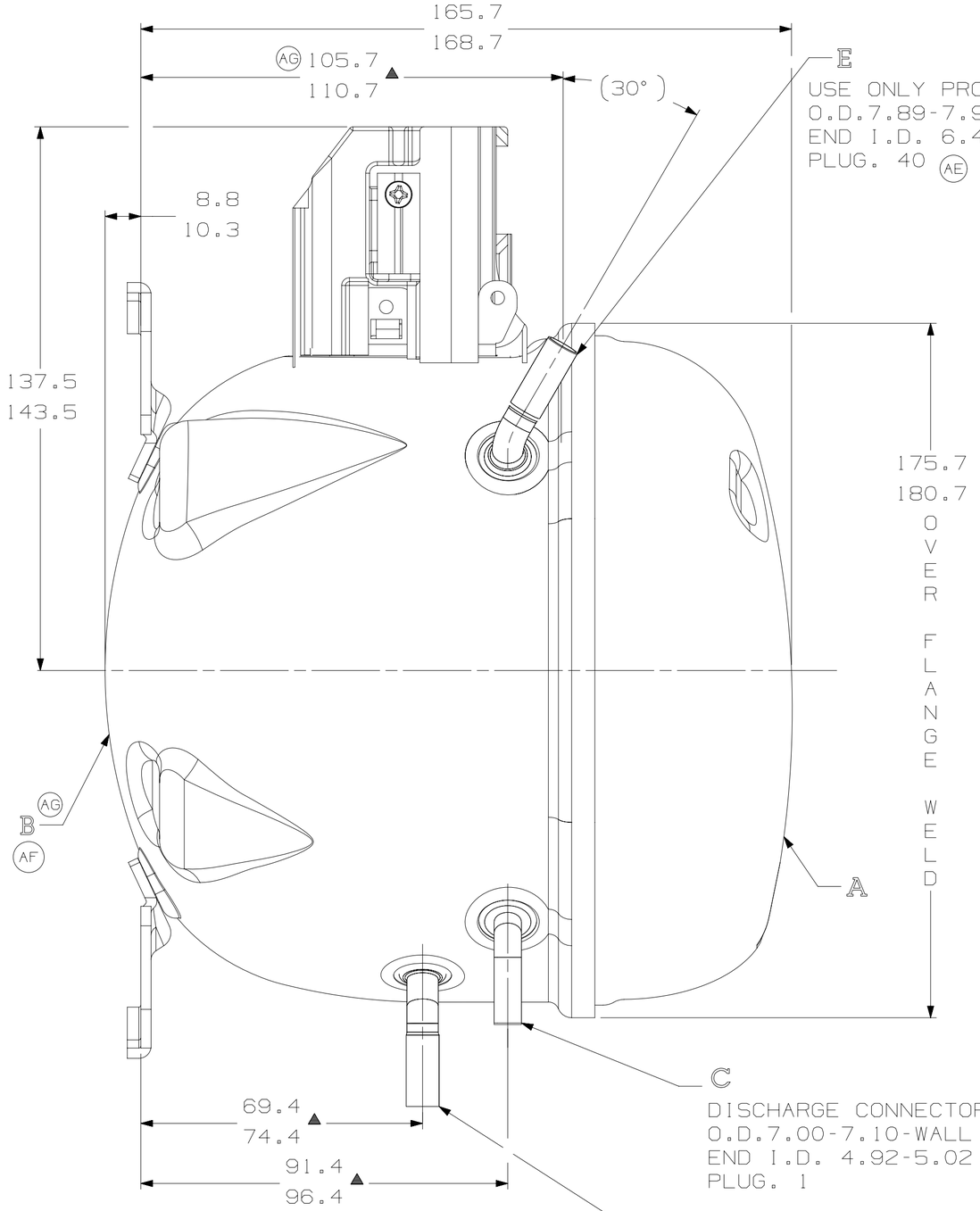

E

USE ONLY PROCESS CONNECTOR-COPPER
O.D.7.89-7.99-WALL 0.90-1.10
END I.D. 6.45-6.55 X 15.0-17.0 DEEP.
PLUG. 40

C

DISCHARGE CONNECTOR-COPPER
O.D.7.00-7.10-WALL 0.90-1.10
END I.D. 4.92-5.02 X 15.0-17.0 DEEP.
PLUG. 1

D

USE ONLY SUCTION CONNECTOR-COPPER
O.D.7.89-7.99-WALL 0.90-1.10
END I.D. 6.45-6.55 X 15.0-17.0 DEEP.
PLUG. 40

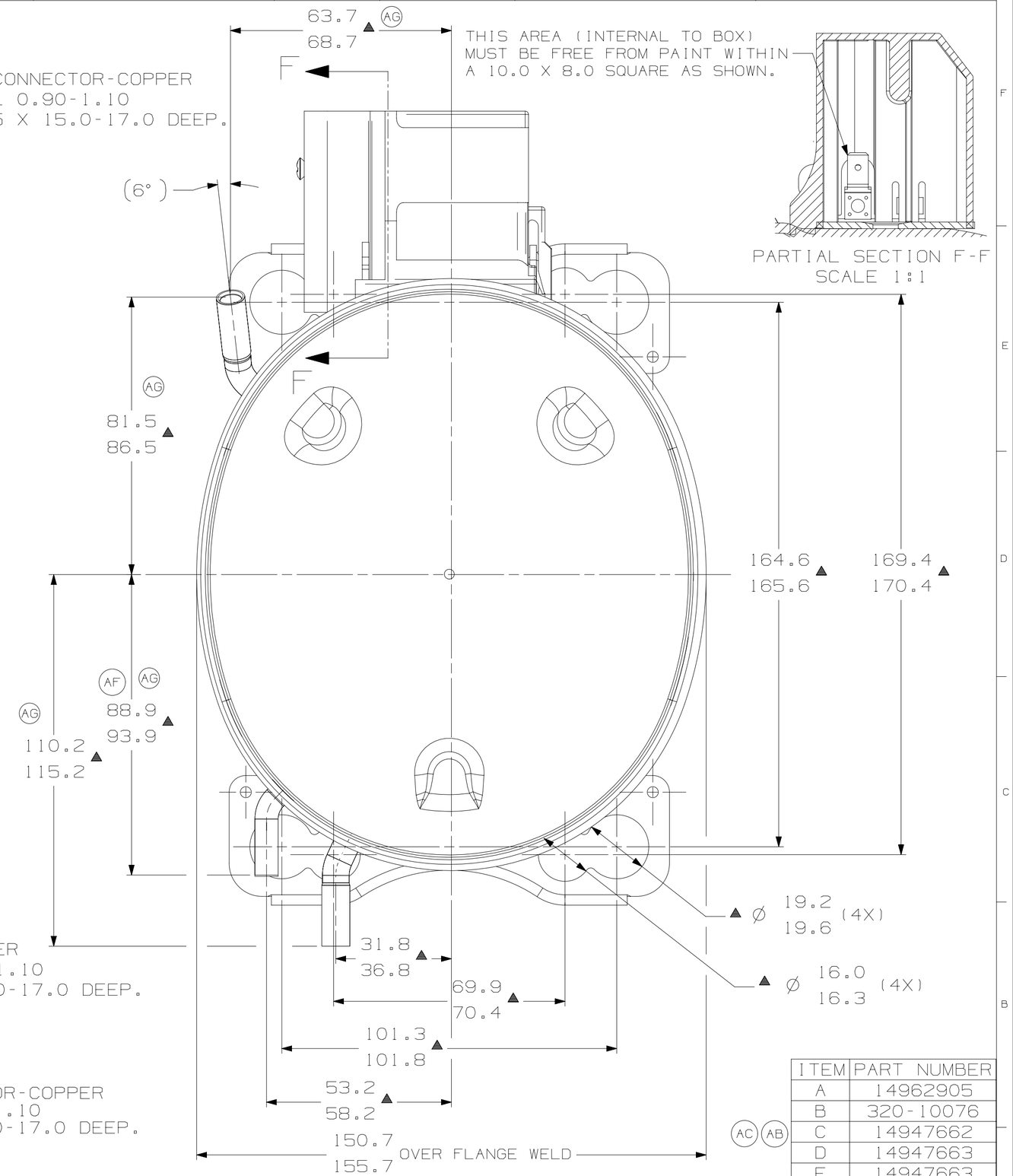

THIS AREA (INTERNAL TO BOX) MUST BE FREE FROM PAINT WITHIN A 10.0 X 8.0 SQUARE AS SHOWN.

PARTIAL SECTION F-F
SCALE 1:1

NOTES:
1- IF SPECIFIED IN BM. ASSEMBLE PARTS AS SHOWN.
2- SEE SPEC. "A-B" & A-C FOR PROCESS.
3- FOR SUPPLIER ENVIRONMENTAL REGULATORY REQUIREMENTS, SEE T. P. CO. GLOBAL SPEC. 08
4- TUBES OF SUCTION, DISCHARGE AND PROCESS MUST BE FREE OF INK ON 15.8mm (5/8 ") FROM TOP OF THE TUBES AS SPEC. T.P.Co. AB-4.

ITEM	PART NUMBER
A	14962905
B	320-10076
C	14947662
D	14947663
E	14947663

LT	LC	CHANGE	DATE
3F 4C 4E 7E 8C	AG	ATUALIZADA 320-10076	EC98010 02-07-21 CIAS. CS.
C4 C8	AF	ATUALIZADA 320-10076	EC96998 30-06-21 CIAS. CS.
F5 A5	AE	ALTERADO PLUG ERA: PLUG 2	EC66313 02-07-15 AMP MSS
A8	AD	ADDED NOTE	EC52840 AMP MF 13/09/13
A2	AC	ERA 580-10028	EC51782 AMP MF 29/08/13
A1	AB	ERA 14947662	EC45731 AMP MF 26/09/12
--	AA	LIBERACAO	EC40378 AMP MF 14/11/11

THIS DRAWING OR PRINT (1) IS THE PROPERTY OF TECUMSEH DO BRASIL LTDA. AND CONTAINS PROPRIETARY AND CONFIDENTIAL INFORMATION BELONGING TO TECUMSEH DO BRASIL. (11) IS MADE AVAILABLE TO THE RECIPIENT ON THE EXPRESS AND SPECIFIC CONDITION THAT NEITHER IT NOR THE INFORMATION CONTAINED THEREON OR DISCLOSED OR MADE AVAILABLE TO OTHERS WITHOUT THE EXPRESS AND SPECIFIC WRITTEN CONSENT OF TECUMSEH DO BRASIL AND THAT SUCH INFORMATION ONLY AS EXPRESSLY AND SPECIFICALLY APPROVED IN WRITING BY TECUMSEH DO BRASIL AND NOT OTHERWISE.(111) SHALL NOT BE COPIED OR TO ANY EXTENT WITHOUT TECUMSEH DO BRASIL PRIOR EXPRESS AND SPECIFIC WRITTEN CONSENT AND (111) SHALL BE RETURNED TO THE RECIPIENT AT HIS REQUEST PROMPTLY AFTER SUCH REQUEST IS MADE.

DO NOT SCALE THIS DRAWING. ALL FERROUS MATERIALS MUST NOT BE MAGNETIZED AS RECEIVED OR AT COMPRESSOR ASSEMBLY

THIRD ANGLE PROJECTION

UNITS: mm

DRAWING SIZE: A2

Q. A.SYMBOLS AS PROCEDURE 2.01.031 TECUMSEH OF BRAZIL

★ : CATEGORY I
▲ : CATEGORY II
■ : CATEGORY III
: CATEGORY IV

Tecumseh

NAME: SALES COMPRESSOR

PART NO.: DCTA045

SCALE: 1:1

PAGE: 1/1

DATE: 10/05/13

REF.:

FAMILY: TA