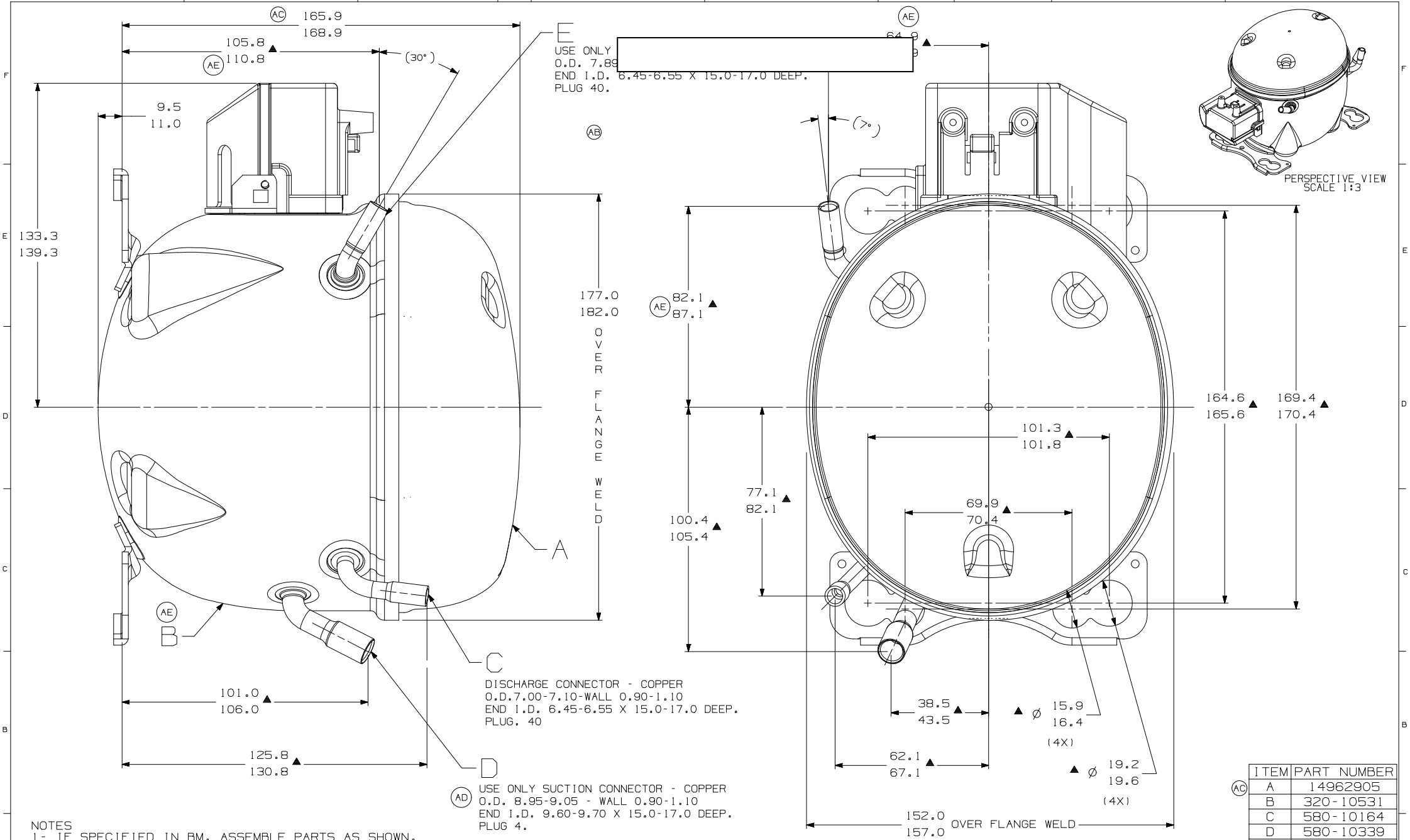

ITEM	PART NUMBER
A	14962905
B	320-10531
C	580-10164
D	580-10339
E	14947663

NOTES
1- IF SPECIFIED IN BM. ASSEMBLE PARTS AS SHOWN.
2- SEE SPEC. "A-B" & A-C FOR PROCESS.
3- FOR SUPPLIER ENVIRONMENTAL REGULATORY REQUIREMENTS, SEE TECUMSEH GLOBAL SPEC. 08
4- TUBES OF SUCTION, DISCHARGE AND PROCESS MUST BE FREE OF INK ON 15.8mm (5/8 ") FROM TOP OF THE TUBES AS SPEC. TECUMSEH AB-4.

LT	LC	CHANGE	DATE
AE	3F 5E 7E 8C	ATUALIZADA 320-10531	EC98010 13-07-21 CIAS. CS.
AD	B6	ALTERADO DIA. ERA: 7.89-7.99	EC99938 23-02-21 PS C.
AC	F1 B1	ERA: 167.0-170.0 ERA: 320-10176 PASSOU PARA 14962905	EC90671 25-06-19 CADEM R.
AB	F5	RETIRADA AREA DE PINTURA DO FURO DO FENCE	EC82134 08/06/2018 CADEM R.
AA	--	LIBERACAO	EC65941 25-11-15 AMP MF

THIS DRAWING OR PRINT (I) IS THE PROPERTY OF TECUMSEH DO BRASIL LTDA., AND CONTAINS PROPRIETARY AND CONFIDENTIAL INFORMATION BELONGING TO TECUMSEH DO BRASIL. (II) IS LOANED AND ACCEPTED BY THE RECIPIENT ON THE EXPRESS AND SPECIFIC CONDITION THAT NEITHER IT NOR THE INFORMATION CONTAINED THEREIN OR DISCLOSED OR MADE AVAILABLE TO OTHERS WITHOUT THE CONSENT OF TECUMSEH DO BRASIL AND THAT SUCH INFORMATION ONLY AS EXPRESSLY AND SPECIFICALLY APPROVED IN WRITING BY TECUMSEH DO BRASIL MAY BE USED FOR ANY PURPOSE. (III) SHALL NOT BE COPIED OR TO ANY EXTENT WITHOUT TECUMSEH DO BRASIL PRIOR EXPRESS AND SPECIFIC WRITTEN CONSENT AND (IV) SHALL BE RETURNED TO TECUMSEH DO BRASIL UPON REQUEST PROMPTLY AFTER SUCH REQUEST IS MADE.

DO NOT SCALE THIS DRAWING. ALL FEATURES NOT SHOWN MAY BE SPECIFIED AS RECEIVED OR AT COMPRESSOR ASSEMBLY

THIRD ANGLE PROJECTION

UNITS: mm

DRAWING SIZE: A2

Q. A.SYMBOLS AS PROCEDURE 2.01.031 TECUMSEH OF BRAZIL

★ : CATEGORY I
▲ : CATEGORY II
■ : CATEGORY III
: CATEGORY IV

tecumseh

NAME	PART NO.
SALES COMPRESSOR	DCTC046

DWN.	CK.	APR.	SCALE	PAGE
A. MARCOS	MARCOS FONTES	WALTER CORREA	1:1	1/1

DATE	REF.	FAMILY
16-06-15	-	TC