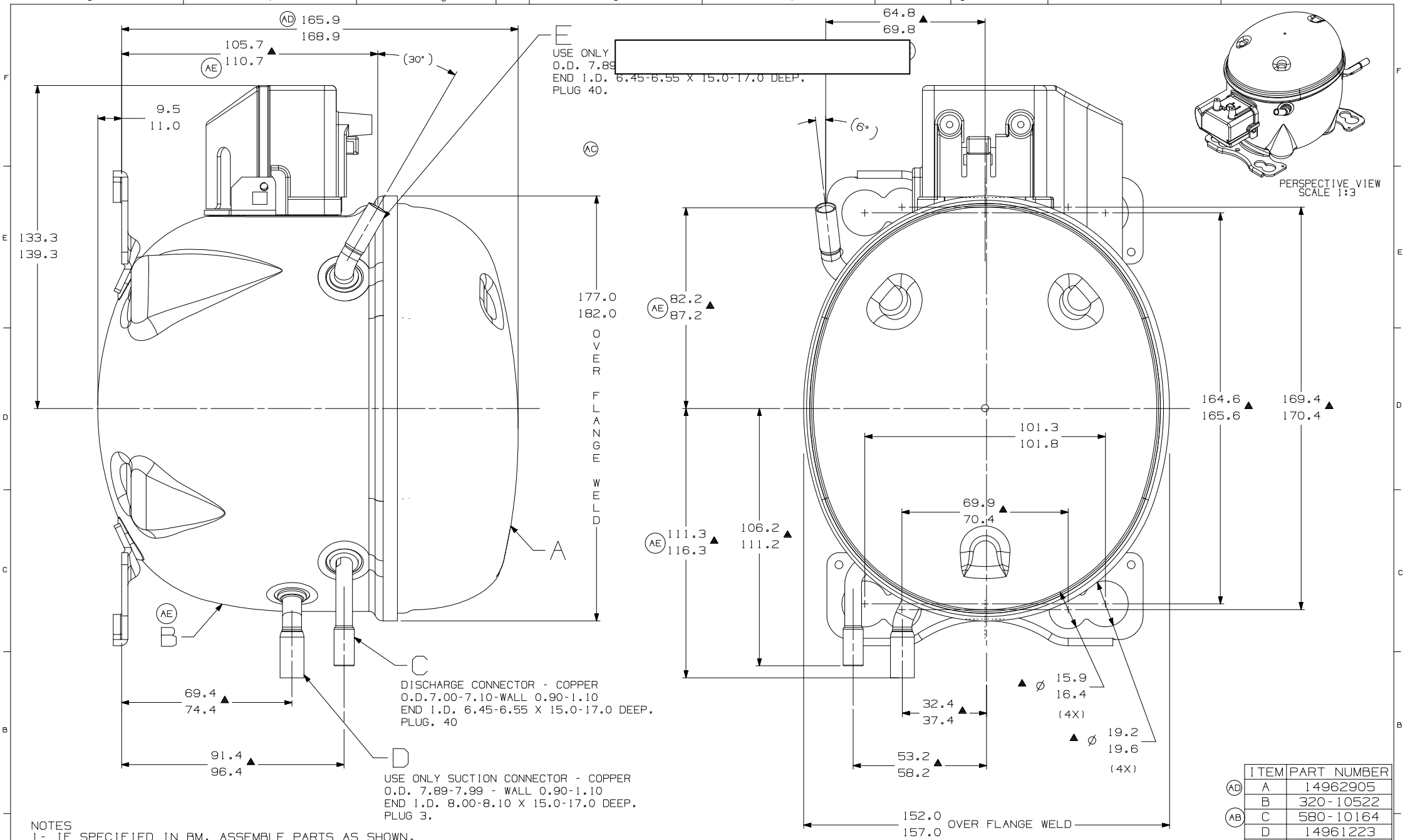

NOTES
1- IF SPECIFIED IN BM. ASSEMBLE PARTS AS SHOWN.
2- SEE SPEC. "A-B" & A-C FOR PROCESS.
3- FOR SUPPLIER ENVIRONMENTAL REGULATORY REQUIREMENTS, SEE TECUMSEH GLOBAL SPEC. 08
4- TUBES OF SUCTION, DISCHARGE AND PROCESS MUST BE FREE OF INK ON 15.8mm (5/8 ") FROM TOP OF THE TUBES AS SPEC. TECUMSEH AB-4.

	ITEM	PART NUMBER
AD	A	14962905
	B	320-10522
AB	C	580-10164
	D	14961223
	E	14947663

Pre-EC98010 14-10-20 CADEM CS	EC90671 25-06-19 CADEM R.	EC82134 08/06/2018 CADEM R.	EC71120 13-06-16 AMP WALTER	EC65941 20-11-15 AMP MF	DATE	
ATUALIZADA 320-10522	ERA: 167.0-170.0 ERA: 320-10176 PASSOU PARA 14962905	RETIRADA AREA DE PINTURA DO FURO DO FENCE	ERA: 14961219	LIBERACAO	CHANGE	
3F 5C 5E 7F 8C	F7	B1	F5	A1	--	LC
AE	AD		AC	AB	AA	LT

THIS DRAWING OR PRINT (I) IS THE PROPERTY OF TECUMSEH DO BRASIL LTDA., AND CONTAINS PROPRIETARY AND CONFIDENTIAL INFORMATION BELONGING TO TECUMSEH DO BRASIL. (II) IS LOANED AND SPECIFICALLY FOR THE EXPRESS PURPOSE OF THE RECIPIENT THAT NEITHER IT NOR THE INFORMATION CONTAINED THEREIN OR DISCLOSED OR MADE AVAILABLE TO OTHERS WITHOUT THE CONSENT OF TECUMSEH DO BRASIL AND THAT SUCH INFORMATION ONLY AS EXPRESSLY AND SPECIFICALLY APPROVED IN WRITING BY TECUMSEH DO BRASIL AND OTHERWISE SUBJECT TO (III) SHALL NOT BE COPIED OR TO ANY EXTENT WITHOUT TECUMSEH DO BRASIL PRIOR EXPRESS AND SPECIFIC WRITTEN CONSENT AND (IV) SHALL BE RETURNED UPON TECUMSEH DO BRASIL'S WRITTEN REQUEST PROMPTLY AFTER SUCH REQUEST IS MADE.

DO NOT SCALE THIS DRAWING. ALL FEATURES MUST MEET SPECIFICATIONS AS RECEIVED ON AT COMPRESSOR ASSEMBLY

THIRD ANGLE PROJECTION

UNITS: mm

DRAWING SIZE: A2

Q. A.SYMBOLS AS PROCEDURE 2.01.031 TECUMSEH OF BRAZIL

★ : CATEGORY I
▲ : CATEGORY II
■ : CATEGORY III
: CATEGORY IV

tecumseh

NAME SALES COMPRESSOR			PART NO. DCTC037
DWN. A. MARCOS	CK. MARCOS FONTES	APR. WALTER CORREA	SCALE 1:1 / PAGE 1/1
DATE 15-06-15	REF.		FAMILY TC