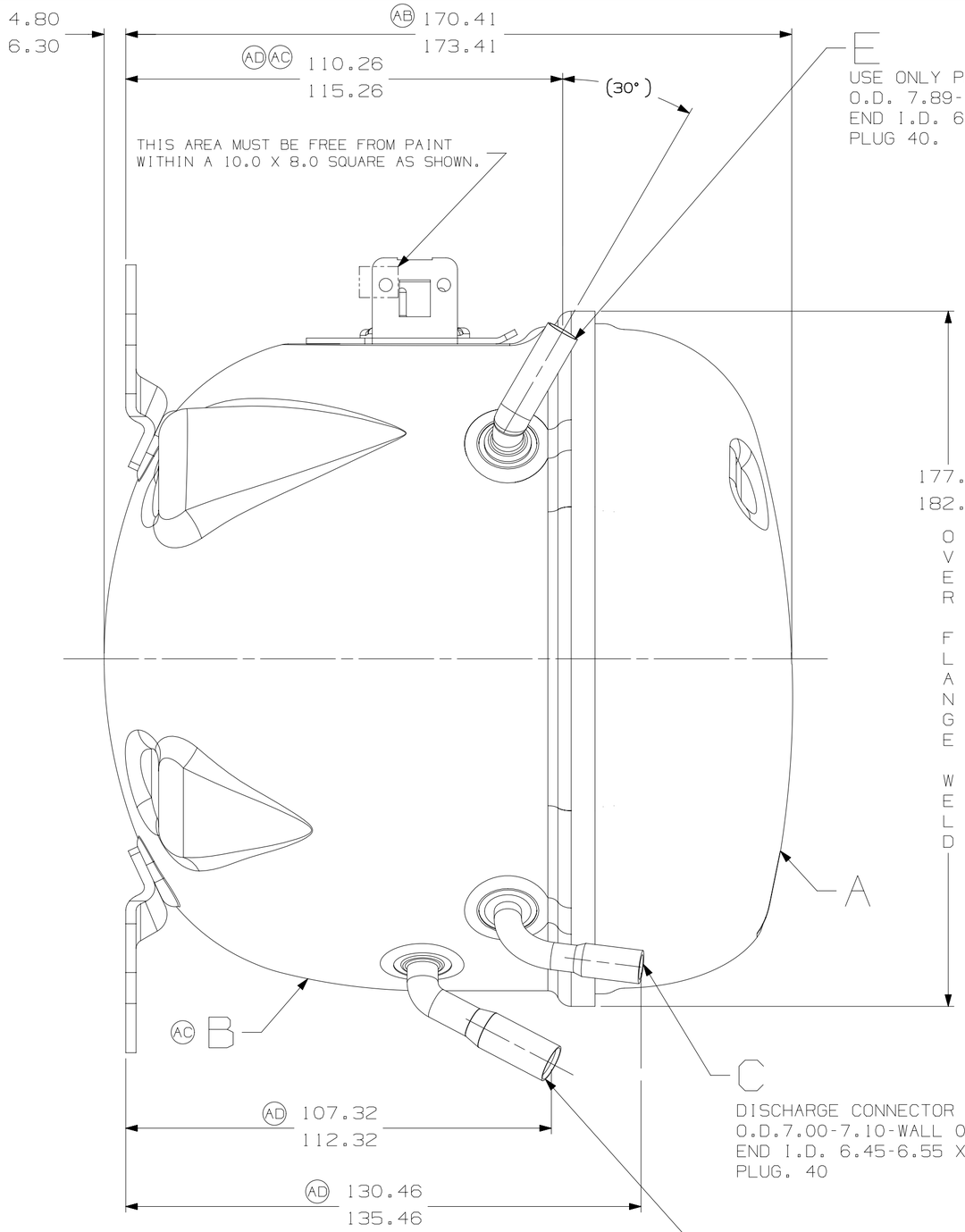

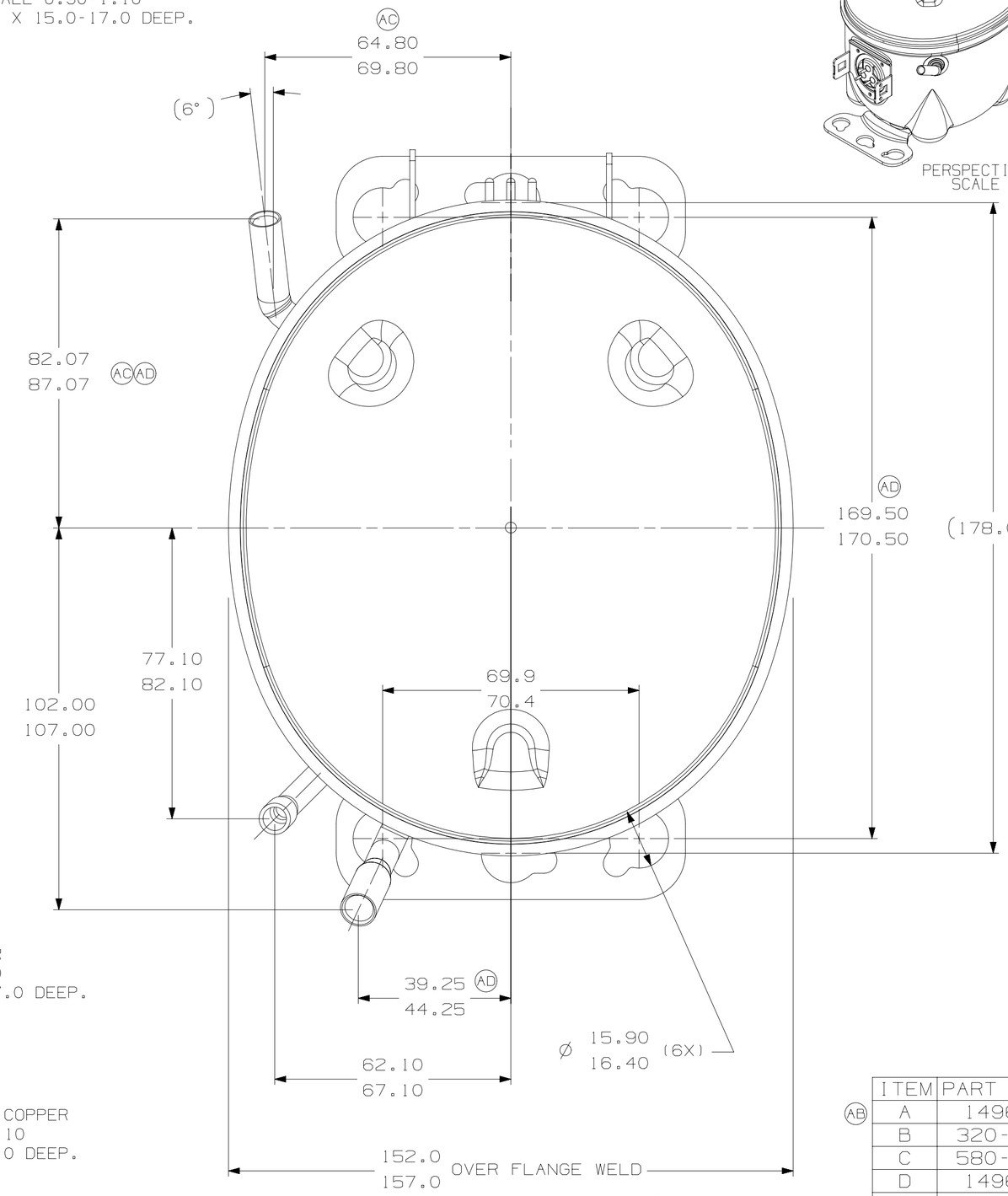

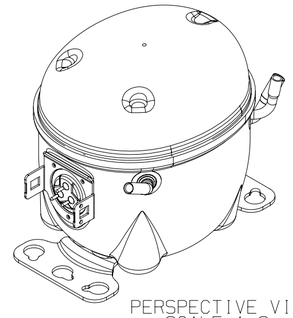

NOTES
1- IF SPECIFIED IN BM. ASSEMBLE PARTS AS SHOWN.
2- SEE SPEC. "A-B" & A-C FOR PROCESS.
3- FOR SUPPLIER ENVIRONMENTAL REGULATORY REQUIREMENTS, SEE TECUMSEH GLOBAL SPEC. 08
4- TUBES OF SUCTION, DISCHARGE AND PROCESS MUST BE FREE OF INK ON 15.8mm (5/8 ") FROM TOP OF THE TUBES AS SPEC. TECUMSEH AB-4.

	ITEM	PART NUMBER
(AB)	A	14962905
	B	320-10644
	C	580-10164
	D	14963887
	E	14947663

	ERA: 106.9-111.9	ERA: 130.5-135.5	ERA: 39.2-44.2	ERA: 169.8-170.2	ERA: 82.2-87.2	ERA: 110.3-115.3	ATUALIZADA CASAS DECIMAIS DE TODAS COTAS E REMOVIDOS CTOS	ATUALIZADA 320-10644	ERA: 171.6-174.6 ERA: 320-10176 PASSOU PARA 14962905	LIBERACAO	CHANGE	DATE
	B7	B3	D1	E4	F7	--	3F 4E 7F 8C	F7	B1	--	LC	LT
	AD						AC	AB		AA		

EC107232 15-12-22 GM. HJ.
EC98010 13-07-21 CIAS. CS.
EC90671 25-06-19 CADEM R.
EC86464 05-11-18 AMP MF

THIS DRAWING OR PRINT (I) IS THE PROPERTY OF TECUMSEH DO BRASIL LTDA. AND CONTAINS PROPRIETARY AND CONFIDENTIAL INFORMATION BELONGING TO TECUMSEH DO BRASIL. (II) IS MADE AVAILABLE TO THE RECIPIENT ON THE EXPRESS AND SPECIFIC CONDITION THAT NEITHER IT NOR THE INFORMATION CONTAINED THEREON OR DISCLOSED OR MADE AVAILABLE TO OTHERS WITHOUT THE EXPRESS AND SPECIFIC WRITTEN CONSENT OF TECUMSEH DO BRASIL AND THAT SUCH INFORMATION ONLY AS EXPRESSLY AND SPECIFICALLY APPROVED IN WRITING BY TECUMSEH DO BRASIL AND NOT OTHERWISE. (III) SHALL NOT BE COPIED OR TO ANY EXTENT WITHOUT TECUMSEH DO BRASIL PRIOR EXPRESS AND SPECIFIC WRITTEN CONSENT AND (IV) SHALL BE RETURNED TO THE ENTITY WHO MADE THE REQUEST PROMPTLY AFTER SUCH REQUEST IS MADE.

DO NOT SCALE THIS DRAWING. ALL FERROUS MATERIALS MUST NOT BE MAGNETIZED AS RECEIVED OR AT COMPRESSOR ASSEMBLY

THIRD ANGLE PROJECTION

UNITS: mm

DRAWING SIZE: A2

Q. A.SYMBOLS AS PROCEDURE 2.01.031 TECUMSEH OF BRAZIL

: CATEGORY I
: CATEGORY II
: CATEGORY III
: CATEGORY IV

Tecumseh

NAME	PART NO.			
SALES COMPRESSOR	DCTC059			
DWN. A. MARCOS	CK. RAMIRO	APR. ZANATTA	SCALE 1:1	PAGE 1/1
DATE 03-09-18	REF.		FAMILY TC	