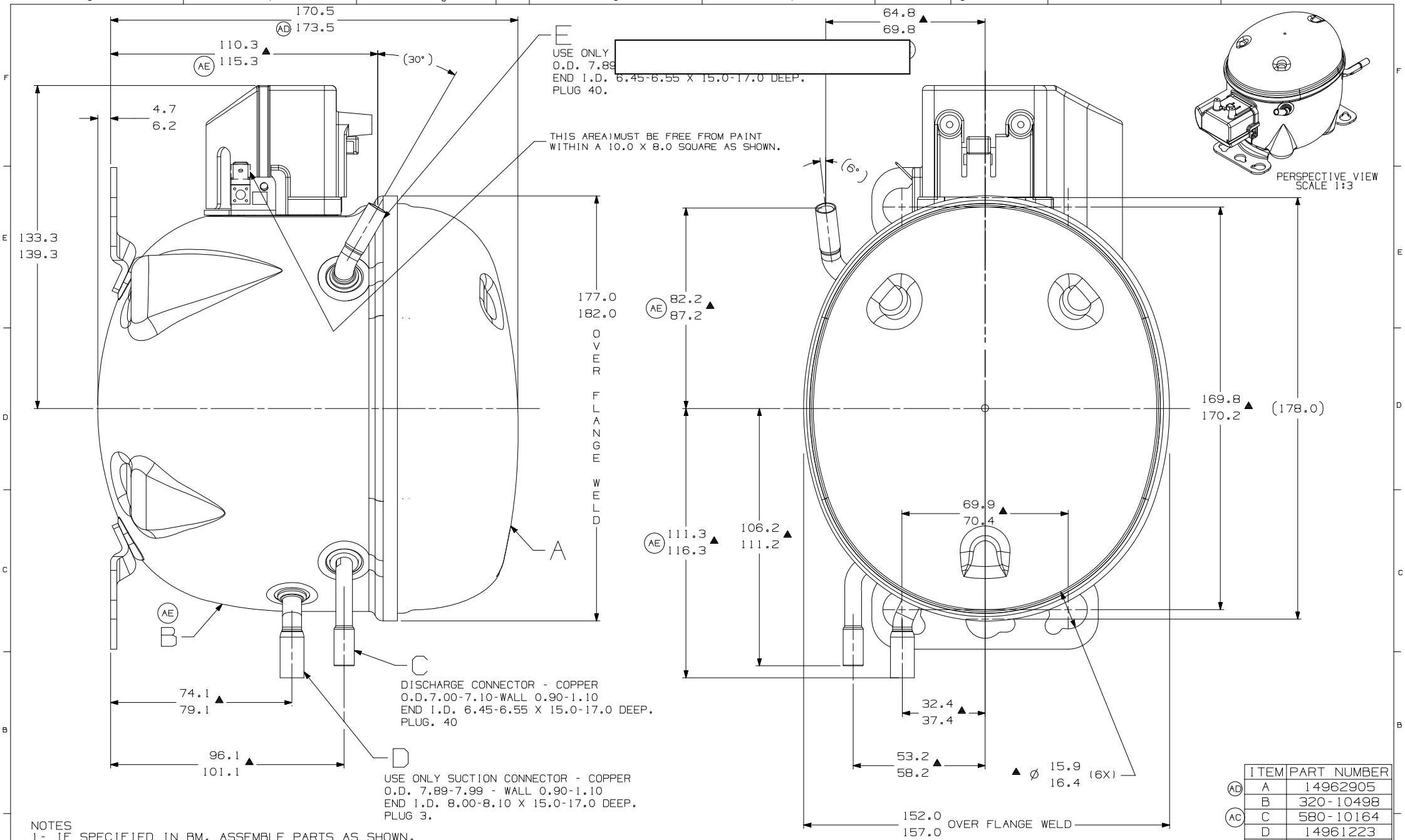

NOTES
1- IF SPECIFIED IN BM. ASSEMBLE PARTS AS SHOWN.
2- SEE SPEC. "A-B" & A-C FOR PROCESS.
3- FOR SUPPLIER ENVIRONMENTAL REGULATORY REQUIREMENTS, SEE TECUMSEH GLOBAL SPEC. 08
4- TUBES OF SUCTION, DISCHARGE AND PROCESS MUST BE FREE OF INK ON 15.8mm (5/8 ") FROM TOP OF THE TUBES AS SPEC. TECUMSEH AB-4.

	ITEM	PART NUMBER
(AD)	A	14962905
	B	320-10498
(AC)	C	580-10164
	D	14961223
	E	14947663

	EC98010 12-07-21 CIAS. CS.	EC90671 25-06-19 CADEM	EC71120 13-06-16 R.AMP WALTER	EC70408 17-02-16 AMP WALTER	EC65941 20-11-15 AMP MF	DATE
	ATUALIZADA 320-10498	ERA: 171.6-174.6	ERA: 320-10176 PASSOU PARA 14962905	ERA: 14961219	ACRESCENTADO BALONETA DO PROTETOR DE TERMINAIS	CHANGE
3F 5E 7F 8C	F7	B1	A1	--	--	LC
AE		AD	AC	AB	AA	LT

THIS DRAWING OR PRINT (1) IS THE PROPERTY OF TECUMSEH DO BRASIL LTDA., AND CONTAINS PROPRIETARY AND CONFIDENTIAL INFORMATION BELONGING TO TECUMSEH DO BRASIL. (11) IS LOANED FOR MUTUAL ASSISTANCE AND ACCEPTANCE BY THE RECEIVER IS THE CONDITION THAT NEITHER IT NOR THE INFORMATION CONTAINED THEREIN OR DISCLOSED OR MADE AVAILABLE TO OTHERS WITHOUT THE CONSENT OF TECUMSEH DO BRASIL AND THAT SUCH INFORMATION ONLY AS EXPRESSLY AND SPECIFICALLY APPROVED IN WRITING BY TECUMSEH DO BRASIL MAY BE USED. (111) DRAWING SHALL NOT BE COPIED OR TO ANY EXTENT WITHOUT TECUMSEH DO BRASIL PRIOR EXPRESS AND SPECIFIC WRITTEN CONSENT AND (IV) SHALL BE RETURNED UPON REQUEST. (V) UPON REQUEST PROMPTLY AFTER SUCH REQUEST IS MADE.

DO NOT SCALE THIS DRAWING. ALL FEATURES MUST MEET SPECIFICATIONS AS RECEIVED ON AT COMPRESSOR ASSEMBLY

THIRD ANGLE PROJECTION

UNITS: mm

DRAWING SIZE: A2

Q. A.SYMBOLS AS PROCEDURE 2.01.031 TECUMSEH OF BRAZIL

★ : CATEGORY I
▲ : CATEGORY II
■ : CATEGORY III
: CATEGORY IV

tecumseh

NAME	PART NO.
SALES COMPRESSOR	DCTC025

DWN.	CK.	APR.	SCALE	PAGE
A. MARCOS	MARCOS FONTES	WALTER CORREA	1:1	1/1

DATE	REF.	FAMILY
09-06-15	-	TC