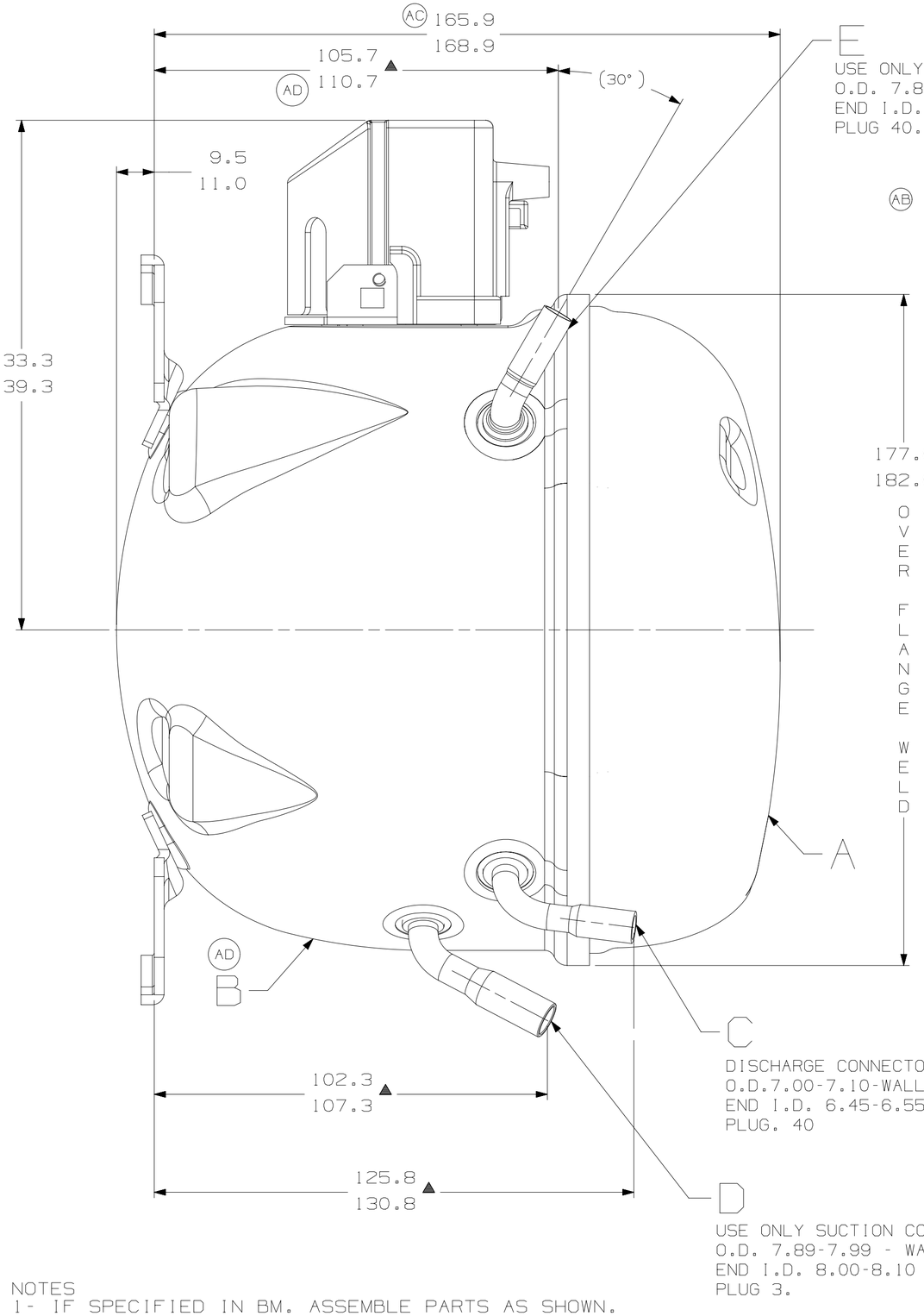

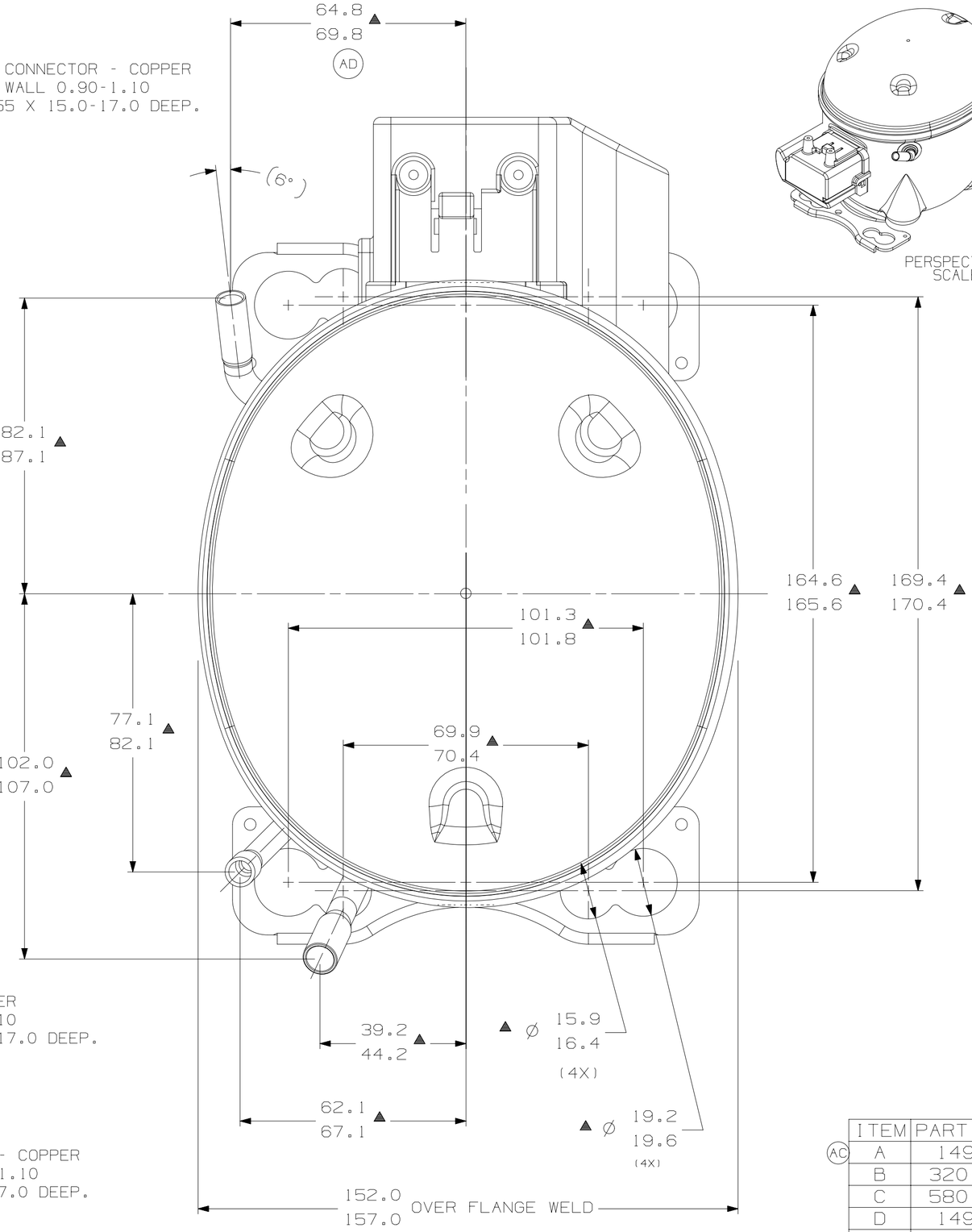

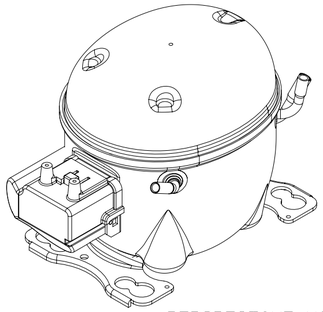

	ITEM	PART NUMBER
AC	A	14962905
	B	320-10523
	C	580-10164
	D	14963887
	E	14947663

NOTES
1- IF SPECIFIED IN BM. ASSEMBLE PARTS AS SHOWN.
2- SEE SPEC. "A-B" & A-C FOR PROCESS.
3- FOR SUPPLIER ENVIRONMENTAL REGULATORY REQUIREMENTS, SEE TECUMSEH GLOBAL SPEC. 08
4- TUBES OF SUCTION, DISCHARGE AND PROCESS MUST BE FREE OF INK ON 15.8mm (5/8 ") FROM TOP OF THE TUBES AS SPEC. TECUMSEH AB-4.

LT	LC	CHANGE	DATE
AD	3F 5E 7F 8C	ATUALIZADA 320-10523	EC98010 12-07-21 CIAS. CS.
AC	F7	ERA: 167.0-170.0	EC90671 25-06-19 CADEM R.
	B1	ERA: 320-10176 PASSOU PARA 14962905	
AB	F5	RETIRADA AREA DE PINTURA DO FURO DO FENCE	EC82134 08/06/2018 CADEM R.
AA	--	LIBERACAO	EC65941 25-11-15 AMP MF

THIS DRAWING OR PRINT (I) IS THE PROPERTY OF TECUMSEH DO BRASIL LTDA. AND CONTAINS PROPRIETARY AND CONFIDENTIAL INFORMATION BELONGING TO TECUMSEH DO BRASIL. (II) IS MADE AVAILABLE TO THE RECIPIENT ON THE EXPRESS AND SPECIFIC CONDITION THAT NEITHER IT NOR THE INFORMATION CONTAINED THEREON OR DISCLOSED OR MADE AVAILABLE TO OTHERS WITHOUT THE EXPRESS AND SPECIFIC WRITTEN CONSENT OF TECUMSEH DO BRASIL AND THAT SUCH INFORMATION ONLY AS EXPRESSLY AND SPECIFICALLY APPROVED IN WRITING BY TECUMSEH DO BRASIL AND NOT OTHERWISE. (III) SHALL NOT BE COPIED OR TO ANY EXTENT WITHOUT TECUMSEH DO BRASIL PRIOR EXPRESS AND SPECIFIC WRITTEN CONSENT AND (IV) SHALL BE RETURNED TO THE ADDRESS OF THE REQUEST PROMPTLY AFTER SUCH REQUEST IS MADE.

DO NOT SCALE THIS DRAWING. ALL FERROUS MATERIALS MUST NOT BE MAGNETIZED AS RECEIVED OR AT COMPRESSOR ASSEMBLY

THIRD ANGLE PROJECTION

UNITS: mm

DRAWING SIZE: A2

Q. A.SYMBOLS AS PROCEDURE 2.01.031 TECUMSEH OF BRAZIL

★ : CATEGORY I
▲ : CATEGORY II
■ : CATEGORY III
: CATEGORY IV

Tecumseh

NAME	PART NO.
SALES COMPRESSOR	DCTC038
	SCALE 1:1 / PAGE 1/1
DATE 15-06-15 / REF.	FAMILY TC