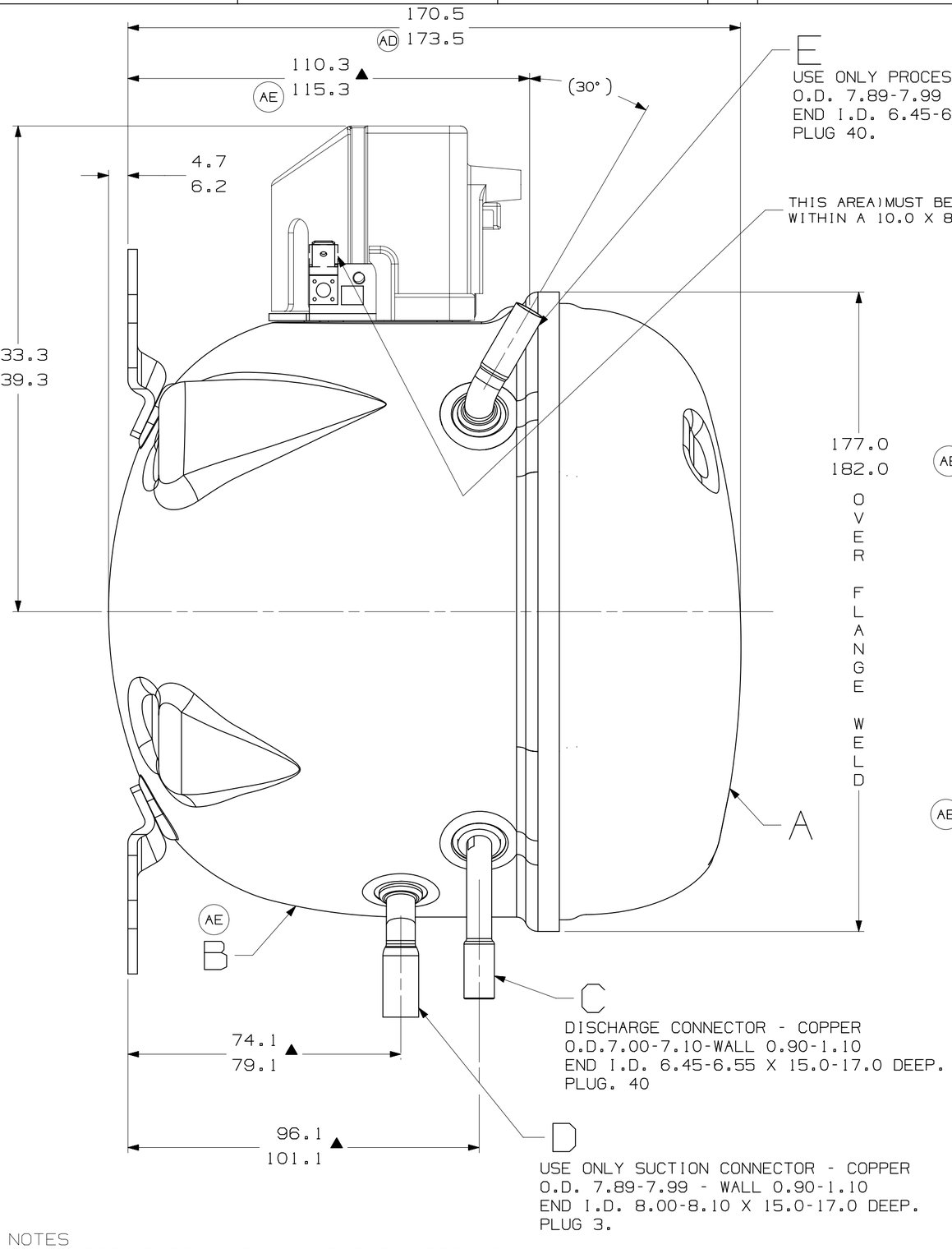

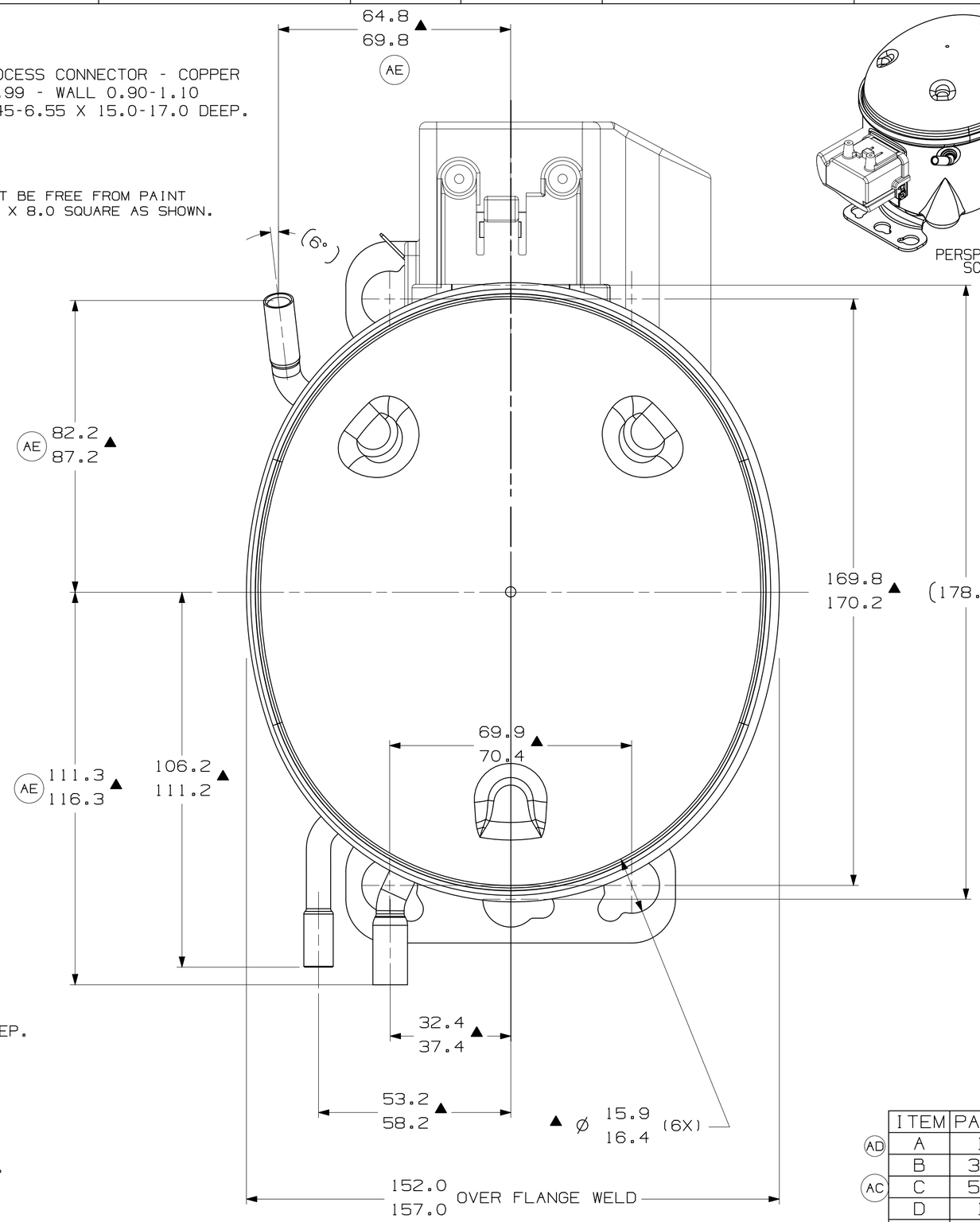

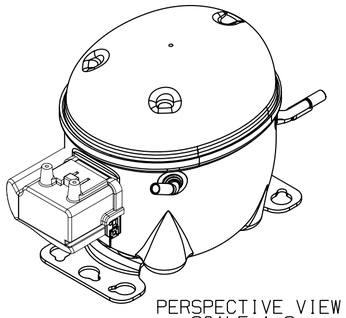

	ITEM	PART NUMBER
(AD)	A	14962905
	B	320-10498
(AC)	C	580-10164
	D	14961223
	E	14947663

NOTES
1- IF SPECIFIED IN BM. ASSEMBLE PARTS AS SHOWN.
2- SEE SPEC. "A-B" & A-C FOR PROCESS.
3- FOR SUPPLIER ENVIRONMENTAL REGULATORY REQUIREMENTS, SEE TECUMSEH GLOBAL SPEC. 08
4- TUBES OF SUCTION, DISCHARGE AND PROCESS MUST BE FREE OF INK ON 15.8mm (5/8 ") FROM TOP OF THE TUBES AS SPEC. TECUMSEH AB-4.

EC98010 12-07-21 CIAS. CS.	EC90671 25-06-19 CADEM R.	EC71120 13-06-16 AMP WALTER	EC70408 17-02-16 AMP WALTER	EC65941 25-11-15 AMP MF		DATE
ATUALIZADA 320-10498	ERA: 171.6-174.6	ERA: 320-10176 PASSOU PARA 14962905	ERA: 14961219	ACRESCENTADO BAIONETA NO PROTETOR DE TERMINAIS	LIBERACAO	CHANGE
3F 5C 5E 7F 8C	F7	B1	A1	--	--	LC
AE	AD		AC	AB	AA	LT

THIS DRAWING OR PRINT (1) IS THE PROPERTY OF TECUMSEH DO BRASIL LTDA. AND CONTAINS PROPRIETARY AND CONFIDENTIAL INFORMATION BELONGING TO TECUMSEH DO BRASIL. (11) IS MADE AVAILABLE TO THE RECIPIENT ON THE EXPRESS AND SPECIFIC CONDITION THAT NEITHER IT NOR THE INFORMATION CONTAINED THEREON OR DISCLOSED OR MADE AVAILABLE TO OTHERS WITHOUT THE EXPRESS AND SPECIFIC WRITTEN CONSENT OF TECUMSEH DO BRASIL AND THAT SUCH INFORMATION ONLY AS EXPRESSLY AND SPECIFICALLY APPROVED IN WRITING BY TECUMSEH DO BRASIL AND NOT OTHERWISE. (111) SHALL NOT BE COPIED OR TO ANY EXTENT WITHOUT TECUMSEH DO BRASIL PRIOR EXPRESS AND SPECIFIC WRITTEN CONSENT AND (IV) SHALL BE RETURNED BY THE RECIPIENT TO TECUMSEH DO BRASIL PROMPTLY AFTER SUCH REQUEST IS MADE.

DO NOT SCALE THIS DRAWING. ALL FERROUS MATERIALS MUST NOT BE MAGNETIZED AS RECEIVED OR AT COMPRESSOR ASSEMBLY

THIRD ANGLE PROJECTION

UNITS: mm

DRAWING SIZE: A2

O. A.SYMBOLS AS PROCEDURE 2.01.031 TECUMSEH OF BRAZIL

★ : CATEGORY I
▲ : CATEGORY II
■ : CATEGORY III
: CATEGORY IV

Tecumseh

NAME	PART NO.
SALES COMPRESSOR	DCTC025
	SCALE 1:1 / PAGE 1/1
DATE 09-06-15 / REF.	FAMILY TC