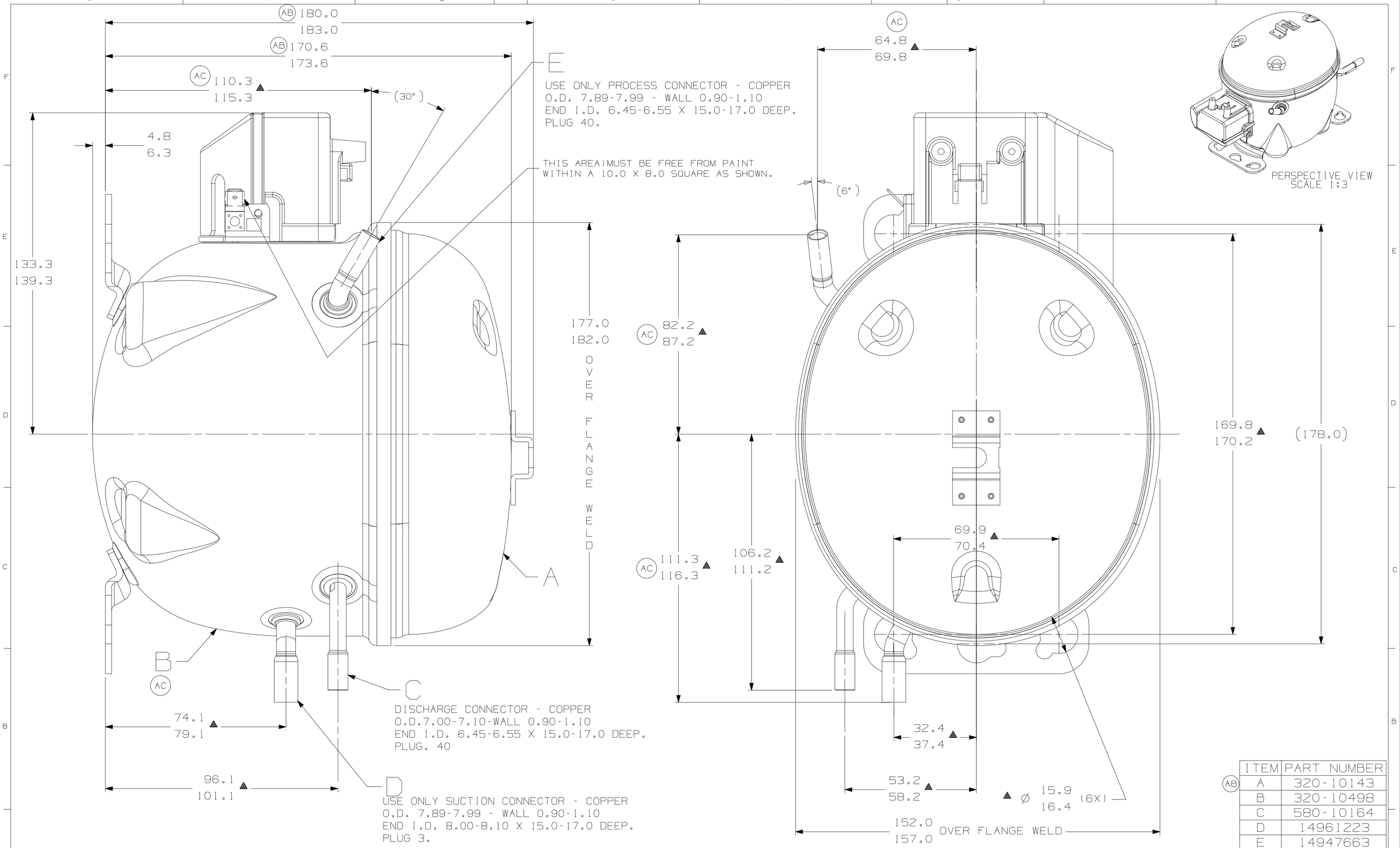

(AB) ITEM	PART NUMBER
A	320-10143
B	320-10498
C	580-10164
D	14961223
E	14947663

NOTES
1- IF SPECIFIED IN BM. ASSEMBLE PARTS AS SHOWN.
2- SEE SPEC. "A-B" & A-C FOR PROCESS.
3- FOR SUPPLIER ENVIRONMENTAL REGULATORY REQUIREMENTS, SEE TECUMSEH SPEC. GLOBAL 08.
4- TUBES OF SUCTION, DISCHARGE AND PROCESS MUST BE FREE OF INK ON 15.8mm (5/8 "") FROM TOP OF THE TUBES AS SPEC. TECUMSEH AB-4.

AC	3F 5C 5E 7F 8B	ATUALIZADA 320-10498	EC98010 13-07-21 CIAS. CS.		
AB	F7 F7	ERA: 181.2-184.2 ERA: 171.6-174.6	EC91021 25-06-19 AMP MF		
	B1	ERA: 320-10249 PASSOU 320-10143			
AA	--	LIBERACAO	EC74934 16-11-16 AMP RG		
LT	LC	CHANGE	DATE		

THIS DRAWING OR PRINT (I) IS THE PROPERTY OF TECUMSEH DO BRASIL LTDA. AND CONTAINS PROPRIETARY AND CONFIDENTIAL INFORMATION BELONGING TO TECUMSEH DO BRASIL, (II) IS MADE AVAILABLE TO THE RECIPIENT ON THE EXPRESS AND SPECIFIC CONDITION THAT NEITHER IT NOR THE INFORMATION CONTAINED THEREIN OR DISCLOSED OR MADE AVAILABLE TO OTHERS WITHOUT THE EXPRESS AND SPECIFIC WRITTEN CONSENT OF TECUMSEH DO BRASIL AND THAT SUCH INFORMATION ONLY AS EXPRESSLY AND SPECIFICALLY APPROVED IN WRITING BY TECUMSEH DO BRASIL AND NOT OTHERWISE, (III) SHALL NOT BE COPIED OR TO ANY EXTENT WITHOUT TECUMSEH DO BRASIL PRIOR EXPRESS AND SPECIFIC WRITTEN CONSENT AND (IV) SHALL BE RETURNED TO THE RECIPIENT UPON WRITTEN REQUEST PROMPTLY AFTER SUCH REQUEST IS MADE.

DO NOT SCALE THIS DRAWING. ALL FERROUS MATERIALS MUST NOT BE MAGNETIZED AS RECEIVED OR AT COMPRESSOR ASSEMBLY

THIRD ANGLE PROJECTION
UNITS: mm
DRAWING SIZE: A2
O. A.SYMBOLS AS PROCEDURE 2.01.031 TECUMSEH OF BRAZIL
★ : CATEGORY I
▲ : CATEGORY II
■ : CATEGORY III
: CATEGORY IV

Tecumseh

NAME	PART NO.
SALES COMPRESSOR	DCTC050
	SCALE 1:1 / PAGE 1/1
DATE 21-10-16 / REF.	FAMILY TC