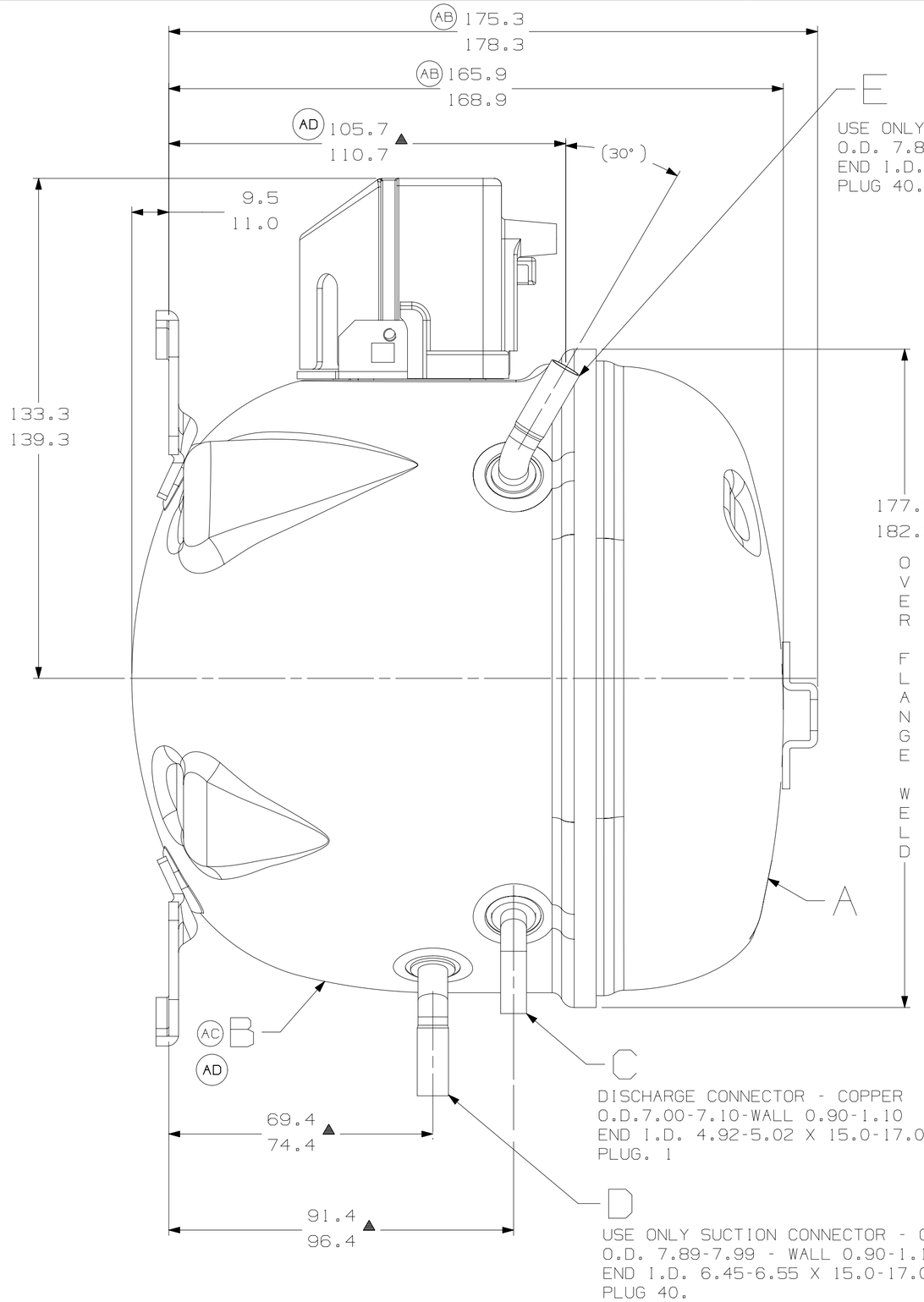


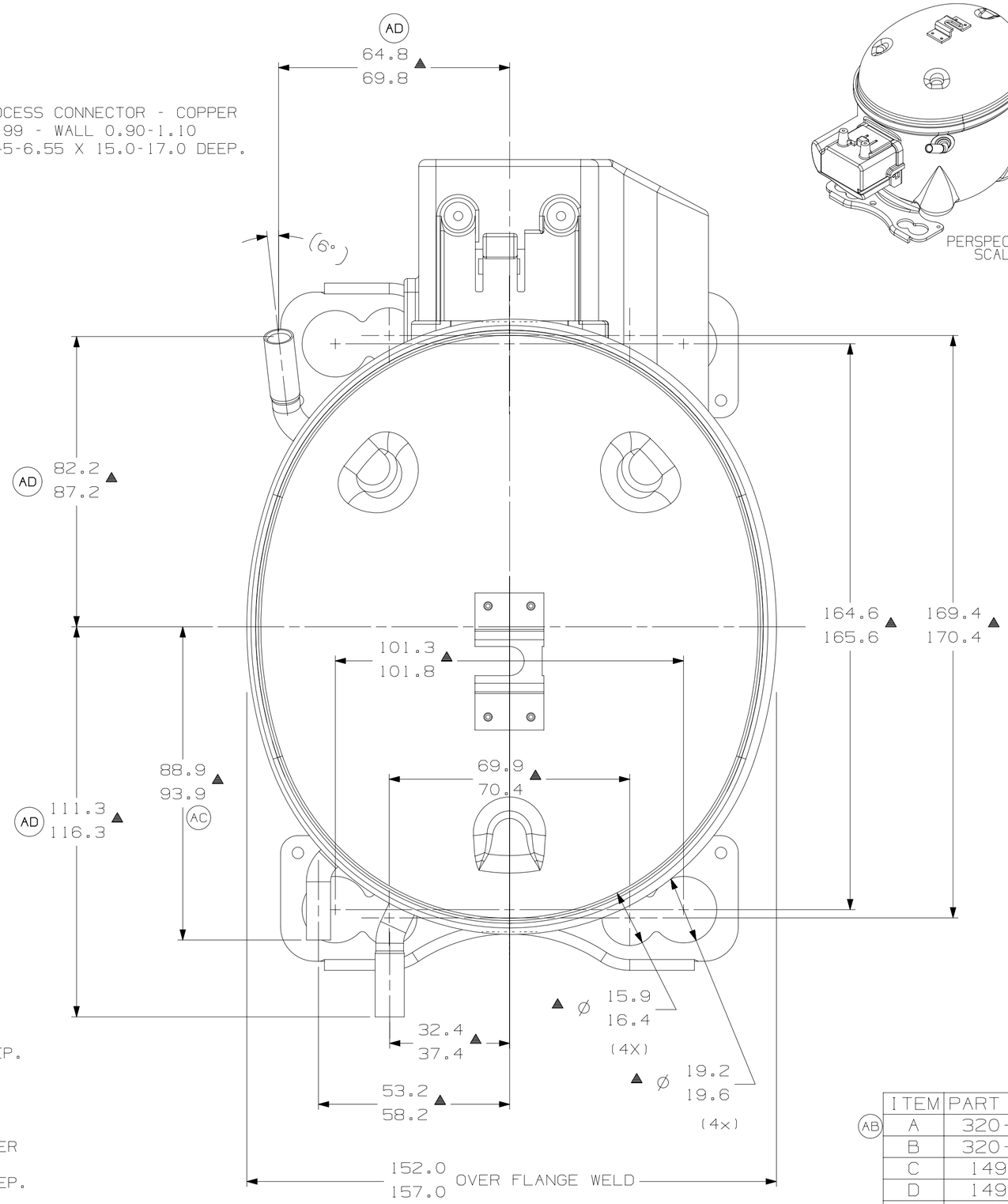


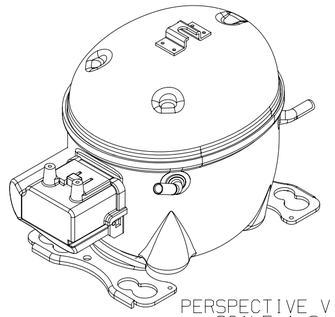


| | ITEM | PART NUMBER |
|---|---|---|
| (AB) | A | 320-10143 |
| | B | 320-10526 |
| | C | 14947662 |
| | D | 14947663 |
| | E | 14947663 |

NOTES
1- IF SPECIFIED IN BM. ASSEMBLE PARTS AS SHOWN.
2- SEE SPEC. "A-B" & A-C FOR PROCESS.
3- FOR SUPPLIER ENVIRONMENTAL REGULATORY REQUIREMENTS, SEE TECUMSEH GLOBAL SPEC. 08
4- TUBES OF SUCTION, DISCHARGE AND PROCESS MUST BE FREE OF INK ON 15.8mm (5/8 ") FROM TOP OF THE TUBES AS SPEC. TECUMSEH AB-4.

| LT | LC | CHANGE | DATE |
|---|---|---|---|
| AD | 3F 5C 5D 7B 7F | ATUALIZADA 320-10526 | EC98010 13-07-21 CIAS. CS. |
| AC | C4 BB | ATUALIZADA 320-10526 | EC96998 30-06-21 CIAS. CPS. |
| AB | F7 F7 | ERA: 176.6-179.6 ERA: 167.0-170.0 | EC91021 25-06-19 AMF MF |
| | B1 | ERA: 320-10249 PASSOU 320-10143 | |
| AA | -- | LIBERACAO | EC88785 13-03-19 AMF MF |

THIS DRAWING OR PRINT (I) IS THE PROPERTY OF TECUMSEH DO BRASIL LTDA. AND CONTAINS PROPRIETARY AND CONFIDENTIAL INFORMATION BELONGING TO TECUMSEH DO BRASIL. (II) IS MADE AVAILABLE TO THE RECIPIENT ON THE EXPRESS AND SPECIFIC CONDITION THAT NEITHER IT NOR THE INFORMATION CONTAINED THEREON OR DISCLOSED OR MADE AVAILABLE TO OTHERS WITHOUT THE EXPRESS AND SPECIFIC WRITTEN CONSENT OF TECUMSEH DO BRASIL AND THAT SUCH INFORMATION ONLY AS EXPRESSLY AND SPECIFICALLY APPROVED IN WRITING BY TECUMSEH DO BRASIL, AND NOT OTHERWISE, (III) SHALL NOT BE COPIED OR TO ANY EXTENT WITHOUT TECUMSEH DO BRASIL PRIOR EXPRESS AND SPECIFIC WRITTEN CONSENT AND (IV) SHALL BE RETURNED BY THE RECIPIENT UPON A WRITTEN REQUEST PROMPTLY AFTER SUCH REQUEST IS MADE.

DO NOT SCALE THIS DRAWING. ALL FERROUS MATERIALS MUST NOT BE MAGNETIZED AS RECEIVED OR AT COMPRESSOR ASSEMBLY

THIRD ANGLE PROJECTION

UNITS: mm

DRAWING SIZE: A2

O. A.SYMBOLS AS PROCEDURE 2.01.031 TECUMSEH OF BRAZIL
✱ : CATEGORY I
▲ : CATEGORY II
■ : CATEGORY III
: CATEGORY IV

Tecumseh

| | |
|---|---|
| NAME | SALES COMPRESSOR |
| PART NO. | DCTC060 |
| SCALE | 1:1 |
| PAGE | 1/1 |
| DATE | 05-01-19 |
| REF. | |
| FAMILY | TC |