DRAWING NO.
SC054

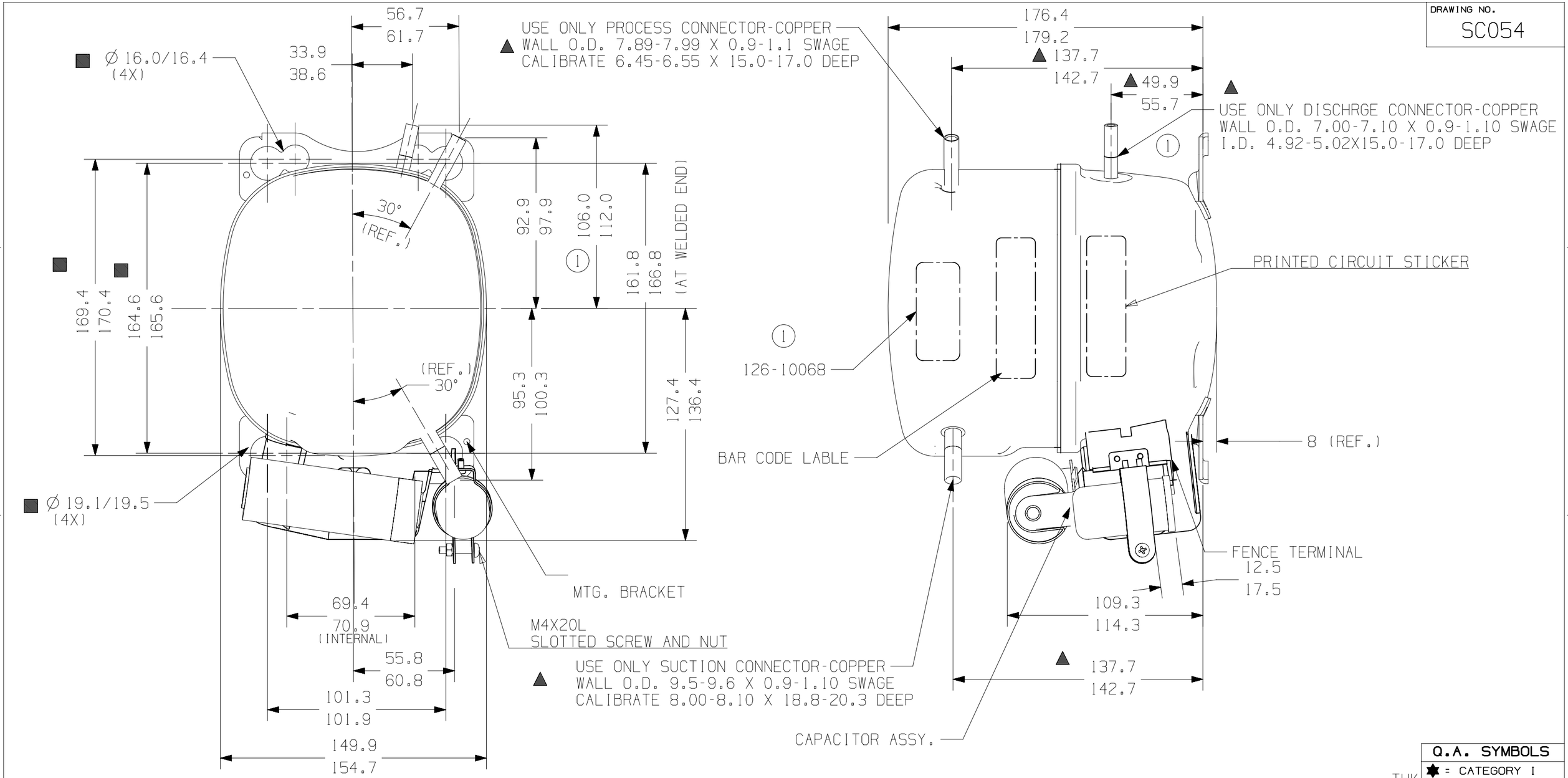

NOTES:
1- IF SPECIFIED IN BM. ASSEMBLE PARTS AS SHOWN.

Q.A. SYMBOLS
★ = CATEGORY I
▲ = CATEGORY II
■ = CATEGORY III
= CATEGORY IV

THK

TOLERANCE	OPEN/1PL.DEC.	2 PL.DEC.	3 PL.DEC.
LINEAR			
ANGULAR			

LT	LC	CHANGE	DATE
01	:	UNIQUE BARCODE STICKER ADDED AND D.TUBE DIMN. UPDATED (EC82525)	PAWAN 08/08/19
00	:	INDIA RELEASE	....

THIS DRAWING OR PRINT (I) IS THE PROPERTY OF TECUMSEH PRODUCTS COMPANY (TECUMSEH) AND CONTAINS PROPRIETARY AND CONFIDENTIAL INFORMATION BELONGING TO TECUMSEH. (II) IS MADE AVAILABLE TO THE RECIPIENT ON THE EXPRESS AND SPECIFIC CONDITION THAT NEITHER IT NOR THE INFORMATION CONTAINED THEREON OR DISCLOSED THEREIN SHALL BE DISCLOSED OR MADE AVAILABLE TO OTHERS WITHOUT THE EXPRESS AND WRITTEN CONSENT OF TECUMSEH, AND THAT SUCH INFORMATION ONLY AS EXPRESSLY AND SPECIFICALLY APPROVED IN WRITING BY TECUMSEH AND NOT OTHERWISE. (III) SHALL BE USED BY THE RECIPIENT IN ANY MANNER OR TO ANY EXTENT WITHOUT TECUMSEH'S PRIOR EXPRESS AND SPECIFIC WRITTEN CONSENT AND (IV) SHALL BE RETURNED BY THE RECIPIENT LATER'S REQUEST TO TECUMSEH AT THE SUCH REQUEST IS MADE.

DO NOT SCALE THIS DRAWING. ALL FERROUS MATERIALS MUST NOT BE MAGNETIZED AS RECEIVED OR AT COMPRESSOR ASSEMBLY.

NAME
SALES COMPRESSOR ASSEMBLY

PANKAJ 14/9/16	PL	CV	SCALE 1=2 & NOTED

THIS PRINT SUPERSEDES ALL PRINTS PRIOR TO

DRAWING NO.
SC054

TECUMSEH PRODUCTS INDIA PVT, LTD.
BALLABGARH, INDIA

SHEET 1/1