DRAWING NO.
SC041,SC42

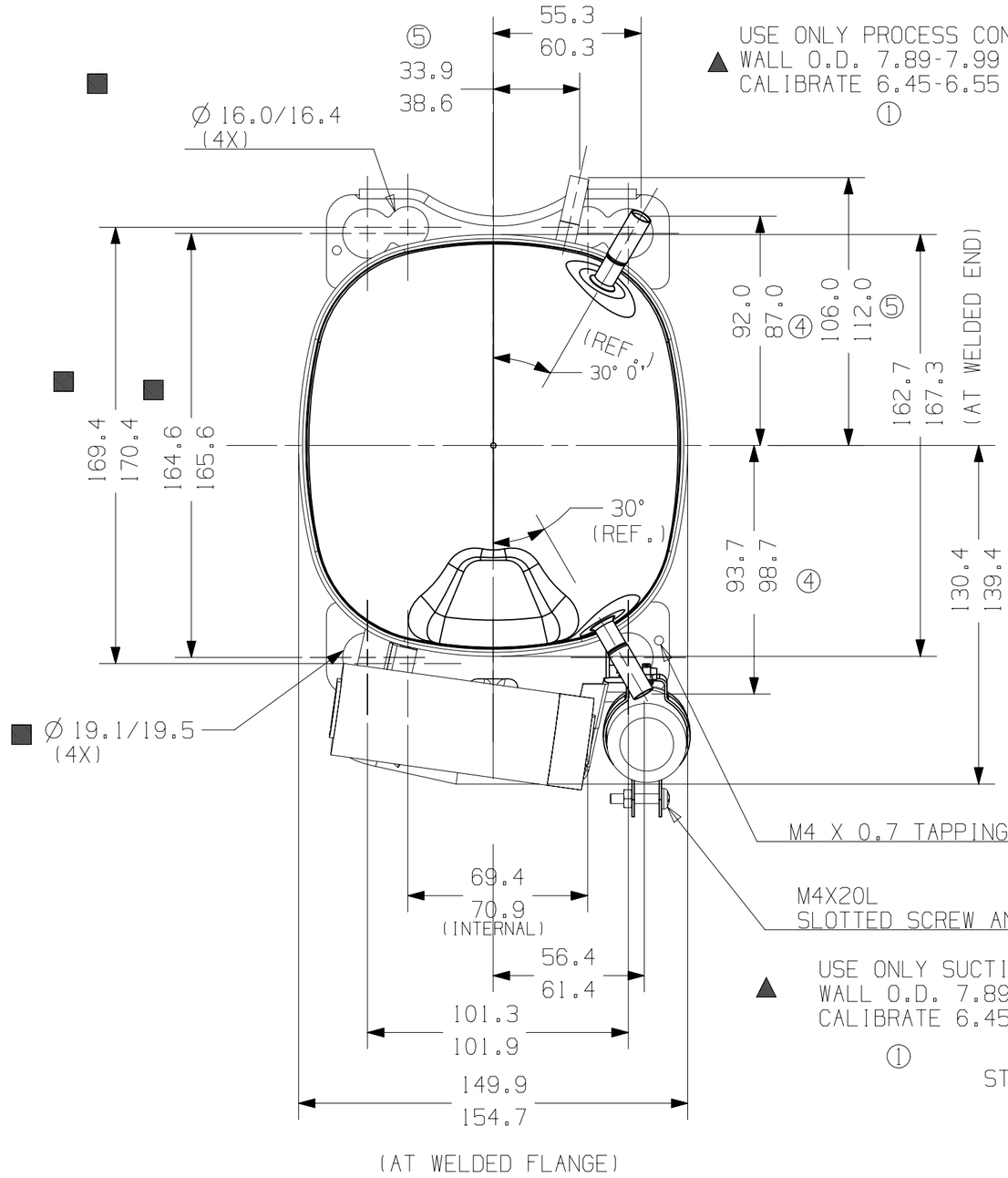

USE ONLY PROCESS CONNECTOR-COPPER
WALL O.D. 7.89-7.99 X 0.9-1.1 SWAGE
CALIBRATE 6.45-6.55 X 15.0-17.0 DEEP
①

USE ONLY SUCTION CONNECTOR-COPPER
WALL O.D. 7.89-7.99 X 0.9-1.10 SWAGE
CALIBRATE 6.45-6.55 X 15.0-17.0 DEEP
①

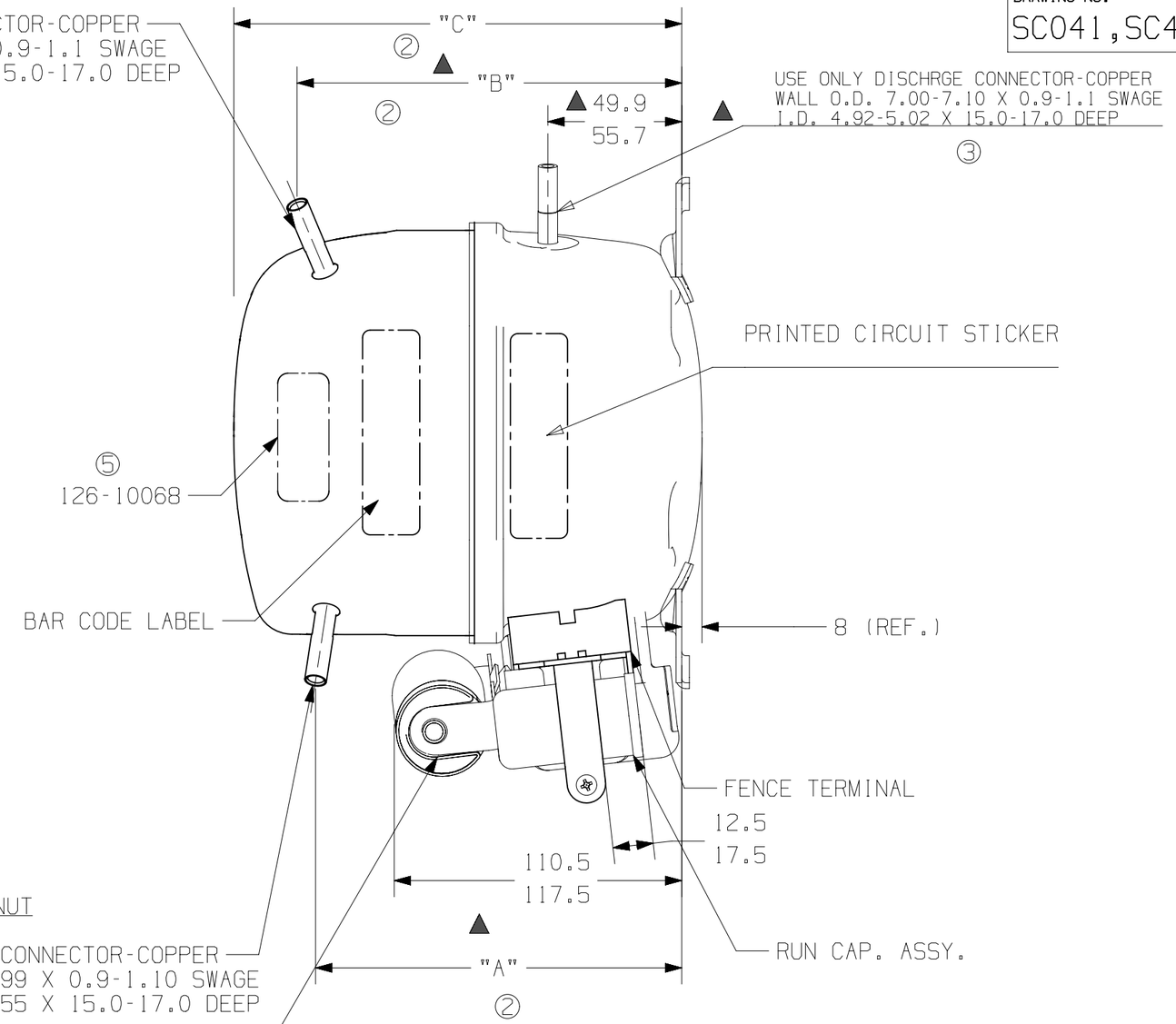

DRG. NO.	DIM. "A"	DIM. "B"	DIM. "C"
SC042	140.9-145.9	147.9-152.9	173.6-176.4
SC041	136.5-141.5	143.5-148.5	169.2-172.0

NOTES:
1- IF SPECIFIED IN BM. ASSEMBLE PARTS AS SHOWN.

REL	LT	LC	CHANGE	DATE
05	--	--	UNIQUE BARCODE STICKER ADDED (EC91189) AND D.TUBE DIMN. UPDATED (EC82525)	PAWAN 09/08/19 EC91189 & EC82525
04	--	--	SUCTION & PROCESS TUBE POSITION UPDATE WAS 96.4-101.4 & 87.3-92.3	PANKAJ 07/05/16 EC71116
03	--	--	TUBE SPECIFICATION CHANGE DUE TO PROCESS CHANGE BUTTEN WELDING TO MFDC	PANKAJ 13/4/15 EC63736
02	--	--	NORMAL HOUSING REPLACE BY BUMPER HOUSING DIM. A INCRESED 5 MM & DIM. B & C INCRESED 1 MM ONLY FOR SC041	PANKAJ 27/5/14 EC65715
01	--	--	TUBES SPECIFICATION CHANGE DUE TO PROCESS CHANGE BRAZING--> MFDC	PANKAJ 12/2/14

INDIA RELEASE 25/4/11

THIS DRAWING OR PRINT (I) IS THE PROPERTY OF TECUMSEH PRODUCTS COMPANY (TECUMSEH) AND CONTAINS PROPRIETARY AND CONFIDENTIAL INFORMATION BELONGING TO TECUMSEH. (II) IS MADE AVAILABLE TO THE RECIPIENT ON THE EXPRESS AND SPECIFIC CONDITION THAT NEITHER IT NOR THE INFORMATION CONTAINED THEREON OR DISCLOSED THEREIN SHALL BE DISCLOSED OR MADE AVAILABLE TO OTHERS WITHOUT THE EXPRESS AND SPECIFIC WRITTEN CONSENT OF TECUMSEH AND THAT SUCH INFORMATION ONLY AS EXPRESSLY AND SPECIFICALLY APPROVED IN WRITING BY TECUMSEH AND NOT OTHERWISE, (III) SHALL NOT BE COPIED OR OTHERWISE, (IV) NOT MANNER OR TO ANY EXTENT WITHOUT TECUMSEH'S PRIOR EXPRESS AND SPECIFIC WRITTEN CONSENT AND (IV) SHALL BE RETURNED BY THE RECIPIENT THEREOF TO TECUMSEH PROMPTLY AFTER SUCH REQUEST IS MADE.

DO NOT SCALE THIS DRAWING. ALL FERROUS MATERIALS MUST NOT BE MAGNETIZED AS RECEIVED OR AT COMPRESSOR ASSEMBLY.

TOLERANCE	OPEN/1PL.DEC.	2 PL.DEC.	3 PL.DEC.
LINEAR			
ANGULAR			

THK

Q.A. SYMBOLS
★ = CATEGORY I
▲ = CATEGORY II
■ = CATEGORY III
= CATEGORY IV

NAME
SALES COMPRESSOR ASSEMBLY

B.K	SC	CV	SCALE 1:2 & NOTED
20FEB10			

TECUMSEH PRODUCTS INDIA PVT, LTD.
BALLABGARH, INDIA

THIS PRINT SUPERSEDES ALL PRINTS PRIOR TO

DRAWING NO.
SC041,SC042

SHEET 1/1